Model 360 Control Valves

Technical Sales Bulletin

Figure 1 Model 360 Control Valve

The Model 360 control valve (Figure 1) is a heavy-duty globe style control valve. These valves are used in all kinds of demanding applications, including oil and gas production and chemical process industries.

Model 360 control valves are balanced cage guided, single port valves that can be used for either throttling or on-off control of either liquids or gasses.

The standard actuator for the Model 360 valve is a Dyna-Flo Model DFC or DFO linear actuators. These heavy-duty actuators are spring return diaphragm style, and can be used for throttling or on-off service, with or without a valve positioner.

Model 360 control valves are manufactured to a high level of quality specifications to ensure superior performance and customer satisfaction.

Features

Sour Service Capability
Available in standard configurations that comply with NACE MR0175/ISO 15156.

Versatility
A wide range of trim options including Low Noise and Anti-Cavitation make the 360 our most versatile control valve.

Field Service Friendly
No special tools are required to change or inspect trim. Top access makes in-line service easy.

Pressure Drop Capabilities
Model 360 control valves can shut off against inlet pressures equal to the ASME B16.34 rating.

Industrial High Quality External Coatings
Our standard industrial high quality external coatings provide long lasting resistance to the harshest environments.

Emissions Reducing Packing
Help prevent the loss of process media and reduce packing maintenance with the use of Dyna-Flo's Live Loaded PTFE, graphite, and KALREZ® packing systems.

SPECIFICATIONS

Configurations

The Model 360 control valve is a high capacity single port, globe style valve with a bolted type bonnet. The standard valve plug action is push down to close. Refer to Table 1.

PTFE Seat and Metal Seat Available.

Consult your Dyna-Flo sales office for other available configurations.

Sizes and Connection Styles (Refer to Table 1)

Model:	360
Size:	1", 1-1/2", 2", 3", 4", 6", 8"
Body:	Globe (All Sizes), Angle (1" / 2" / 3" / 4" / 6")
Rating:	ASME 150 / 300 / 600
Connection:	RF / RTJ / BWE - All Sizes SWE / NPT - 1", 1-1/2", and 2"

Maximum Inlet Pressures and Temperatures

Flanged valves consistent with ASME Class 150, 300, and 600 rating as per ASME B16.34, unless limited.

Maximum Pressure Drops

Maximum pressure drop is the same as maximum inlet pressure unless restricted by the following:

Standard Valve Trim: Figures 10A - 10D.

Anti-Cavitation Trim: Figures 10A - 10D.

Low-Noise Valve Trim: Figures 10A - 10D.

Characteristic and Flow Direction

- Equal Percentage (Standard) - Flow Down
- Quick Opening - Flow Down
- Linear - Flow Down
- Low-Noise 3 (Linear) - Flow Up
- Anti-Cavitation 1-Stage (Linear) - Flow Down
- Anti-Cavitation 2-Stage (Linear) - Flow Down

Dimensions

Valve and Actuator Outline Dimension Diagram

Refer to Figure 2.

Valve and Actuator Assembly Dimensions

Refer to Tables 8 to 19.

Approximate Valve Body and Actuator Weights

Refer to Table 7.

Materials

Body and bonnet material options include:

LCC (A350-LF2 optional* bonnet material)

WCC (A350-LF2 optional* bonnet material)

WC9 (A182-F22 optional* bonnet material)

CF8M (A182-F316 optional* bonnet material)

***NOTE:** Dyna-Flo reserves the right to substitute a cast material with the forged bar equivalent in the event a casting is not available.

Refer to Figures 10A - 10D for valve construction material temperature limitations. Refer to Tables 23 - 25 for trim selections.

Cross-Section of the Model 360 Control Valves

Refer to Figure 3.

Port Diameters and Maximum Valve Plug Travel

Refer to Tables 4 to 6.

Packing Type and Examples

The Standard packing is PTFE V-ring. Live-loaded low emission, graphite, KALREZ® and other packing arrangements are available. Refer to Figure 9.

Maximum Valve Sizing Coefficients

For standard coefficients at maximum travel, refer to Table 29 & 30. For full list of coefficients refer to document P-CVSM.

Service Application

Refer to Tables 20 - 28.

For more information and other options contact your Dyna-Flo sales office.

Table 1

Available Valve Configurations

Valve Model	Valve Size Inch	End Connection					
		NPT[1]	RF[2] and RTJ[3] (Flanged)			BWE[4]	SWE[5]
			ASME Class 150	ASME Class 300	ASME Class 600		
360	1 / 1-1/2 / 2	✓	✓	✓	✓	✓	✓
	3 / 4 / 6 / 8	×	✓	✓	✓	✓	✓
360A	1 & 2	×	✓	✓	✓	✓	✓
	3 / 4 / 6	×	✓	✓	✓	✓	✓

Notes:
- **1** - NPT = Screwed.
- **2** - RF = Raised Face.
- **3** - RTJ = Ring Type Joint.
- **4** - BWE = Butt Weld (ASME Class 600 Only).
- **5** - SWE = Socket Weld (ASME Class 600 Only).

Table 2

Standard Shut-Off Classifications (in accordance with ANSI/FCI 70.2 and IEC 60534-4)

Valve Trim	Seat Option	Shut-Off Class	
All (Except Anti-Cavitation)	PTFE (Soft Seated)	Standard	Class V (Air Test)
		Optional	Class V
			Class VI[1]
	Metal	Standard	Class IV
		Optional	Class V[2]
			Class VI[1]
Anti-Cavitation 1 Stage	Metal	Standard	Class IV
		Optional	Class V
Anti-Cavitation 2 Stage	Metal	Standard	Class V

Notes:
- **1** - Refer to Table 3.
- **2** - Class V shut-off requires a spring-loaded seal ring, radius-seat plug, and wide-bevel seat ring. Not available with 8 inch port quick opening cages.

Table 3

Available Valve Configurations for Class VI Shut-Off (in accordance with ANSI/FCI 70.2 and IEC 60534-4)

Valve Model	Port Size Inch	Valve Seat	Minimum Seat Load
360 Refer to Tables 23 to 25 for Trim options	≥3.4375≤7	Metal[1]	300 lbs./lineal inch
	≥3.4375≤7	PTFE	Consult Dyna-Flo

Note: **1** - Class VI shut-off requires a spring-loaded seal ring, radius-seat plug, and wide-bevel seat ring.

Table 4

Globe Valve Size, Port Diameters, Plug Travel, Stem and Yoke Boss Diameters

Port	Valve Size	Port Diameter		Max Valve Plug Travel		Standard Yoke Boss Diameter (YBD)			
						Stem Diameter		YBD	
	Inch	Inch	mm	Inch	mm	Inch	mm	Inch	mm
Full Port	1	1-5/16	33.3	3/4	19.1	3/8	9.5	2-1/8	54.0
	1-1/2	1-7/8	47.6	3/4	19.1	3/8	9.5	2-1/8	54.0
	2	2-5/16	58.7	1-1/8	28.6	1/2	12.7	2-13/16	71.4
	3	3-7/16	87.3	1-1/2	38.1	1/2	12.7	2-13/16	71.4
	4	4-3/8	111.1	2	50.8	1/2	12.7	2-13/16	71.4
	6	7	177.8	2	50.8	3/4	19.1	3-9/16	90.5
	8	8	203.2	3	76.2	3/4	19.1	3-9/16	90.5
Reduced Port	1-1/2	1-5/16	33.3	3/4	19.1	3/8	9.5	2-1/8	54.0
	2	1-5/16	33.3	3/4	19.1	1/2	12.7	2-13/16	71.4
	3	2-5/16	58.7	1-1/8	28.6	1/2	12.7	2-13/16	71.4
	4	2-7/8	73.0	1-1/2	38.1	1/2	12.7	2-13/16	71.4
	6	4-3/8	111.1	2	50.8	3/4	19.1	3-9/16	90.5

Table 5

Anti-Cavitation Valve Size, Port Diameters, Plug Travel, Stem and Yoke Boss Diameters

Valve Size	1 Stage				2 Stage				Standard Yoke Boss Diameter (YBD)			
	Port Diameter		Max Valve Plug Travel		Port Diameter		Max Valve Plug Travel		Stem Diameter		YBD	
Inch	Inch	mm	Inch	mm	Inch	mm	Inch	mm	Inch	mm	Inch	mm
1	1-5/16	33.3	1	25.4	1	25.4	1	25.4	1/2	12.7	2-13/16	71.4
1-1/2	1-7/8	47.6	7/8	22.2	1-5/16	33.3	1-1/2	38.1	1/2	12.7	2-13/16	71.4
2	2-5/16	58.7	1-1/8	28.6	1-7/8	47.6	2	50.8	1/2	12.7	2-13/16	71.4
3	3-7/16	87.3	1-5/8	41.3	2-7/8	73.0	3	76.2	1/2	12.7	2-13/16	71.4
4	4-3/8	111.1	2-1/8	54.0	2-7/8	73.0	4	101.6	1/2	12.7	2-13/16	71.4
6	7	177.8	2-1/4	57.2	5-3/8	136.5	4	101.6	3/4	19.1	3-9/16	90.5
8	8	203.2	3-3/8	85.7	7	177.8	6	152.4	1	25.4	5	127

Table 6

Angle Valve Size, Port Diameters, Plug Travel, Stem and Yoke Boss Diameters

Port	Valve Size	Port Diameter		Max Valve Plug Travel		Standard Yoke Boss Diameter (YBD)			
						Stem Diameter		YBD	
	Inch	Inch	mm	Inch	mm	Inch	mm	Inch	mm
Full Port	1	1-5/16	33.3	3/4	19.1	3/8	9.5	2-1/8	54.0
	2	1-7/8	47.6	3/4	19.1	3/8	9.5	2-1/8	54.0
	3	2-7/8	73.0	1-1/2	38.1	1/2	12.7	2-13/16	71.4
	4	3-7/16	87.3	1-1/2	38.1	1/2	12.7	2-13/16	71.4
	6	4-3/8	111.1	2	50.8	1/2	12.7	2-13/16	71.4
Reduced Port	2	1-5/16	33.3	3/4	19.1	3/8	9.5	2-1/8	54.0
	4	2-5/16	58.7	1-1/8	28.6	1/2	12.7	2-13/16	71.4
	6	2-7/8	73.0	1-1/2	38.1	1/2	12.7	2-13/16	71.4

Table 7

Valve Body / Actuator Configurations and Approximate Weights

Valve Size (inch)	**Body Only** lb (Kg)	**With Fail Open Actuator Size**	**Valve and Actuator Assembly Weight** lb (Kg)	**With Fail Close Actuator Size**	**Valve and Actuator Assembly Weight** lb (Kg)
1	30 (14)	DFO - 1046	66 (30)	DFC - 1046	64 (29)
		DFO - 1069	70 (32)	DFC - 1069	78 (26)
1-1/2	45 (20)	DFO - 1046	81 (37)	DFC - 1046	79 (36)
		DFO - 1069	85 (39)	DFC - 1069	93 (42)
2	85 (39)	DFO - 2069	136 (62)	DFC - 2069	135 (61)
		DFO - 2105	167 (76)	DFC - 2105	175 (79)
3	125 (57)	DFO - 2069	176 (80)	DFC - 2069	175 (79)
		DFO - 2105	207 (94)	DFC - 2105	215 (98)
4	170 (77)	DFO - 2105	252 (114)	DFC - 2105	260 (118)
		DFO - 2156	277 (126)	DFC - 2156	291 (132)
6	350 (159)	DFO - 3156	466 (211)	DFC - 3156	471 (214)
		DFO - 3220	585 (266)	DFC - 3220	604 (274)
8	900 (408)	DFO - 3220	1135 (515)	DFC - 3220	1154 (523)

Table 8

Valve Body Dimensions with BWE* End Connection Inches (mm)
(Refer to Figure 2 on Page 13) (For 'C' Dimensions refer to Tables 12 to 19 on Pages 8 to 12)

Valve Size Inch	Globe Body A	Globe Body B	Angle Body A
1	8.25 (210)	2.38 (60)	4.12 (105)
1-1/2	9.88 (251)	2.81 (71)	—
2	11.25 (286)	3.06 (78)	5.62 (143)
3	13.25 (337)	3.81 (97)	6.62 (168)
4	15.50 (394)	5.06 (129)	7.75 (197)
6	20.00 (508)	5.50 (140)	10.00 (254)
8	24.00 (610)	7.50 (191)	—

***NOTE:** BWE - Buttweld.

Table 9

Valve Body Dimensions with SWE* End Connection Inches (mm)
(Refer to Figure 2 on Page 13) (For 'C' Dimensions refer to Tables 12 to 19 on Pages 8 to 12)

Valve Size Inch	Globe Body A	Globe Body B	Angle Body A
1	8.25 (210)	2.38 (60)	4.12 (105)
1-1/2	9.88 (251)	2.81 (71)	—
2	11.25 (286)	3.06 (78)	5.62 (143)
3	—	—	—
4	—	—	—
6	—	—	—
8	—	—	—

***NOTE:** SWE - Socketweld.

Table 10

Angle Valve Body Dimensions with RF* End Connection Inches (mm)
(Refer to Figure 2 on Page 13) (For 'C' Dimensions refer to Tables 12 to 19 on Pages 8 to 12)

Valve Size Inch	**Pressure Rating**	**A**
1 Inch	ASME Class 150	3.62 (92)
	ASME Class 300	3.88 (99)
	ASME Class 600	4.12 (105)
2 Inch	ASME Class 150	5.00 (127)
	ASME Class 300	5.25 (133)
	ASME Class 600	5.62 (143)
3 Inch	ASME Class 150	5.88 (149)
	ASME Class 300	6.25 (159)
	ASME Class 600	6.62 (168)
4 Inch	ASME Class 150	6.94 (176)
	ASME Class 300	7.25 (184)
	ASME Class 600	7.75 (197)
6 Inch	ASME Class 150	8.88 (226)
	ASME Class 300	9.31 (236)
	ASME Class 600	10.00 (254)

***NOTE:** RF - Raised Face.

Table 11

Angle Valve Body Dimensions with RTJ* End Connection Inches (mm)
(Refer to Figure 2 on Page 13) (For 'C' Dimensions refer to Tables 12 to 19 on Pages 8 to 12)

Valve Size Inch	**Pressure Rating**	**A**
1 Inch	ASME Class 150	3.88 (99)
	ASME Class 300	4.12 (105)
	ASME Class 600	4.12 (105)
2 Inch	ASME Class 150	5.25 (133)
	ASME Class 300	5.56 (141)
	ASME Class 600	5.69 (145)
3 Inch	ASME Class 150	6.12 (155)
	ASME Class 300	6.56 (167)
	ASME Class 600	6.69 (170)
4 Inch	ASME Class 150	7.19 (183)
	ASME Class 300	7.56 (192)
	ASME Class 600	7.81 (198)
6 Inch	ASME Class 150	9.12 (232)
	ASME Class 300	9.62 (244)
	ASME Class 600	10.06 (256)

***NOTE:** RTJ - Ring Type Joint.

Table 12

Valve Assembly (RF End Connection) with Standard Actuator Envelope Dimensions Inches (mm)
(with common stem diameter) (Refer to Figure 2 on Page 13)

Valve Size	Pressure Rating	Actuator Size	A	B	C*	D		E
						DFC	DFO	
1 Inch	ASME Class 150	1046	7.25 (184)	2.38 (60)	5.00 (127)	23.78 (604)	22.31 (567)	11.38 (289)
		1069	7.25 (184)	2.38 (60)	5.00 (127)	27.68 (703)	24.25 (616)	13.12 (333)
	ASME Class 300	1046	7.75 (197)	2.38 (60)	5.00 (127)	23.78 (604)	22.31 (567)	11.38 (289)
		1069	7.75 (197)	2.38 (60)	5.00 (127)	27.68 (703)	24.25 (616)	13.12 (333)
	ASME Class 600	1046	8.25 (210)	2.38 (60)	5.00 (127)	23.78 (604)	22.31 (567)	11.38 (289)
		1069	8.25 (210)	2.38 (60)	5.00 (127)	27.68 (703)	24.25 (616)	13.12 (333)
1-1/2 Inch	ASME Class 150	1046	8.75 (222)	2.81 (71)	4.88 (124)	23.66 (601)	22.19 (564)	11.38 (289)
		1069	8.75 (222)	2.81 (71)	4.88 (124)	27.56 (700)	24.13 (613)	13.12 (333)
	ASME Class 300	1046	9.25 (235)	2.81 (71)	4.88 (124)	23.66 (601)	22.19 (564)	11.38 (289)
		1069	9.25 (235)	2.81 (71)	4.88 (124)	27.56 (700)	24.13 (613)	13.12 (333)
	ASME Class 600	1046	9.88 (251)	2.81 (71)	4.88 (124)	23.66 (601)	22.19 (564)	11.38 (289)
		1069	9.88 (251)	2.81 (71)	4.88 (124)	27.56 (700)	24.13 (613)	13.12 (333)
2 Inch	ASME Class 150	2069	10.00 (254)	3.06 (78)	6.50 (165)	29.88 (759)	27.70 (704)	13.12 (333)
		2105	10.00 (254)	3.06 (78)	6.50 (165)	36.75 (933)	32.22 (818)	16.00 (406)
	ASME Class 300	2069	10.50 (267)	3.06 (78)	6.50 (165)	29.88 (759)	27.70 (704)	13.12 (333)
		2105	10.50 (267)	3.06 (78)	6.50 (165)	36.75 (933)	32.22 (818)	16.00 (406)
	ASME Class 600	2069	11.25 (286)	3.06 (78)	6.50 (165)	29.88 (759)	27.70 (704)	13.12 (333)
		2105	11.25 (286)	3.06 (78)	6.50 (165)	36.75 (933)	32.22 (818)	16.00 (406)
3 Inch	ASME Class 150	2069	11.75 (299)	3.81 (97)	7.50 (191)	30.88 (784)	28.70 (729)	13.12 (333)
		2105	11.75 (299)	3.81 (97)	7.50 (191)	37.75 (959)	33.22 (844)	16.00 (406)
	ASME Class 300	2069	12.50 (318)	3.81 (97)	7.50 (191)	30.88 (784)	28.70 (729)	13.12 (333)
		2105	12.50 (318)	3.81 (97)	7.50 (191)	37.75 (959)	33.22 (844)	16.00 (406)
	ASME Class 600	2069	13.25 (337)	3.81 (97)	7.50 (191)	30.88 (784)	28.70 (729)	13.12 (333)
		2105	13.25 (337)	3.81 (97)	7.50 (191)	37.75 (959)	33.22 (844)	16.00 (406)
4 Inch	ASME Class 150	2105	13.88 (353)	5.06 (129)	8.69 (221)	38.94 (989)	34.41 (874)	16.00 (406)
		2156	13.88 (353)	5.06 (129)	8.69 (221)	38.94 (989)	34.41 (874)	18.62 (460)
	ASME Class 300	2105	14.50 (368)	5.06 (129)	8.69 (221)	38.94 (989)	34.41 (874)	16.00 (406)
		2156	14.50 (368)	5.06 (129)	8.69 (221)	38.94 (989)	34.41 (874)	18.62 (460)
	ASME Class 600	2105	15.50 (394)	5.06 (129)	8.69 (221)	38.94 (989)	34.41 (874)	16.00 (406)
		2156	15.50 (394)	5.06 (129)	8.69 (221)	38.94 (989)	34.41 (874)	18.62 (460)
		3220	15.50 (394)	5.06 (129)	8.69 (221)	45.17 (1147)	41.38 (1051)	21.12 (536)
6 Inch	ASME Class 150	3156	17.75 (451)	5.50 (140)	9.88 (311)	40.79 (1036)	37.98 (888)	18.62 (473)
		3220	17.75 (451)	5.50 (140)	9.88 (311)	46.36 (1178)	42.57 (1081)	21.12 (536)
	ASME Class 300	3156	18.62 (473)	5.50 (140)	9.88 (311)	40.79 (1036)	37.98 (888)	18.62 (473)
		3220	18.62 (473)	5.50 (140)	9.88 (311)	46.36 (1178)	42.57 (1081)	21.12 (536)
	ASME Class 600	3156	20.00 (508)	5.50 (140)	9.88 (311)	40.79 (1036)	37.98 (888)	18.62 (473)
		3220	20.00 (508)	5.50 (140)	9.88 (311)	46.36 (1178)	42.57 (1081)	21.12 (536)

Table 12 (Continued)

Valve Assembly (RF End Connection) with Standard Actuator Envelope Dimensions Inches (mm)
(with common stem diameter) (Refer to Figure 2 on Page 13)

Valve Size	Pressure Rating	Actuator Size	A	B	C*	D		E
						DFC	DFO	
8 Inch	ASME Class 150	3220	21.38 (543)	7.50 (191)	16.56 (421)	53.04 (1347)	49.25 (1251)	21.12 (536)
	ASME Class 300	3220	22.38 (568)	7.50 (191)	16.56 (421)	53.04 (1347)	49.25 (1251)	21.12 (536)
	ASME Class 600	3220	24.00 (610)	7.50 (191)	16.56 (421)	53.04 (1347)	49.25 (1251)	21.12 (536)

***NOTE:** 'C' dimensions (and 'D' dimensions) will vary depending on valve stem diameter, refer to Tables 12 to 19.

Table 13

Valve Assembly (RTJ End Connection) with Standard Actuator Envelope Dimensions Inches (mm)
(with common stem diameter) (Refer to Figure 2 on Page 13)

Valve Size	Pressure Rating	Actuator Size	A	B	C*	D		E
						DFC	DFO	
1 Inch	ASME Class 150	1046	7.75 (197)	2.38 (60)	5.00 (127)	23.78 (604)	22.31 (567)	11.38 (289)
		1069	7.75 (197)	2.38 (60)	5.00 (127)	27.68 (703)	24.25 (616)	13.12 (333)
	ASME Class 300	1046	8.25 (210)	2.38 (60)	5.00 (127)	23.78 (604)	22.31 (567)	11.38 (289)
		1069	8.25 (210)	2.38 (60)	5.00 (127)	27.68 (703)	24.25 (616)	13.12 (333)
	ASME Class 600	1046	8.25 (210)	2.38 (60)	5.00 (127)	23.78 (604)	22.31 (567)	11.38 (289)
		1069	8.25 (210)	2.38 (60)	5.00 (127)	27.68 (703)	24.25 (616)	13.12 (333)
1-1/2 Inch	ASME Class 150	1046	9.25 (235)	2.81 (71)	4.88 (124)	23.66 (601)	22.19 (564)	11.38 (289)
		1069	9.25 (235)	2.81 (71)	4.88 (124)	27.56 (700)	24.13 (613)	13.12 (333)
	ASME Class 300	1046	9.75 (248)	2.81 (71)	4.88 (124)	23.66 (601)	22.19 (564)	11.38 (289)
		1069	9.75 (248)	2.81 (71)	4.88 (124)	27.56 (700)	24.13 (613)	13.12 (333)
	ASME Class 600	1046	9.88 (251)	2.81 (71)	4.88 (124)	23.66 (601)	22.19 (564)	11.38 (289)
		1069	9.88 (251)	2.81 (71)	4.88 (124)	27.56 (700)	24.13 (613)	13.12 (333)
2 Inch	ASME Class 150	2069	10.50 (267)	3.06 (78)	6.50 (165)	29.88 (759)	27.70 (704)	13.12 (333)
		2105	10.50 (267)	3.06 (78)	6.50 (165)	36.75 (933)	32.22 (818)	16.00 (406)
	ASME Class 300	2069	11.12 (282)	3.06 (78)	6.50 (165)	29.88 (759)	27.70 (704)	13.12 (333)
		2105	11.12 (282)	3.06 (78)	6.50 (165)	36.75 (933)	32.22 (818)	16.00 (406)
	ASME Class 600	2069	11.38 (289)	3.06 (78)	6.50 (165)	29.88 (759)	27.70 (704)	13.12 (333)
		2105	11.38 (289)	3.06 (78)	6.50 (165)	36.75 (933)	32.22 (818)	16.00 (406)
3 Inch	ASME Class 150	2069	12.25 (311)	3.81 (97)	7.50 (191)	30.88 (784)	28.70 (729)	13.12 (333)
		2105	12.25 (311)	3.81 (97)	7.50 (191)	37.75 (959)	33.22 (844)	16.00 (406)
	ASME Class 300	2069	13.12 (333)	3.81 (97)	7.50 (191)	30.88 (784)	28.70 (729)	13.12 (333)
		2105	13.12 (333)	3.81 (97)	7.50 (191)	37.75 (959)	33.22 (844)	16.00 (406)
	ASME Class 600	2069	13.38 (340)	3.81 (97)	7.50 (191)	30.88 (784)	28.70 (729)	13.12 (333)
		2105	13.38 (340)	3.81 (97)	7.50 (191)	37.75 (959)	33.22 (844)	16.00 (406)

Table 13 (Continued)

Valve Assembly (RTJ End Connection) with Standard Actuator Envelope Dimensions Inches (mm)
(with common stem diameter) (Refer to Figure 2 on Page 13)

Valve Size	Pressure Rating	Actuator Size	A	B	C*	D		E
						DFC	DFO	
4 Inch	ASME Class 150	2105	14.38 (365)	5.06 (129)	8.69 (221)	38.94 (989)	34.41 (874)	16.00 (406)
		2156	14.38 (365)	5.06 (129)	8.69 (221)	38.94 (989)	34.41 (874)	18.62 (460)
	ASME Class 300	2105	15.12 (384)	5.06 (129)	8.69 (221)	38.94 (989)	34.41 (874)	16.00 (406)
		2156	15.12 (384)	5.06 (129)	8.69 (221)	38.94 (989)	34.41 (874)	18.62 (460)
	ASME Class 600	2105	15.62 (397)	5.06 (129)	8.69 (221)	38.94 (989)	34.41 (874)	16.00 (406)
		2156	15.62 (397)	5.06 (129)	8.69 (221)	38.94 (989)	34.41 (874)	18.62 (460)
		3220	15.62 (397)	5.06 (129)	8.69 (221)	45.17 (1147)	41.38 (1051)	21.12 (536)
6 Inch	ASME Class 150	3156	18.25 (464)	5.50 (140)	9.88 (311)	40.79 (1036)	37.98 (888)	18.62 (473)
		3220	18.25 (464)	5.50 (140)	9.88 (311)	46.36 (1178)	42.57 (1081)	21.12 (536)
	ASME Class 300	3156	19.25 (489)	5.50 (140)	9.88 (311)	40.79 (1036)	37.98 (888)	18.62 (473)
		3220	19.25 (489)	5.50 (140)	9.88 (311)	46.36 (1178)	42.57 (1081)	21.12 (536)
	ASME Class 600	3156	20.12 (511)	5.50 (140)	9.88 (311)	40.79 (1036)	37.98 (888)	18.62 (473)
		3220	20.12 (511)	5.50 (140)	9.88 (311)	46.36 (1178)	42.57 (1081)	21.12 (536)
8 Inch	ASME Class 150	3220	21.88 (556)	7.50 (191)	16.56 (421)	53.04 (1347)	49.25 (1251)	21.12 (536)
	ASME Class 300	3220	23.00 (584)	7.50 (191)	16.56 (421)	53.04 (1347)	49.25 (1251)	21.12 (536)
	ASME Class 600	3220	24.12 (613)	7.50 (191)	16.56 (421)	53.04 (1347)	49.25 (1251)	21.12 (536)

***NOTE:** 'C' dimensions (and 'D' dimensions) will vary depending on valve stem diameter, refer to Tables 12 to 19.

Table 14

Valve Assembly (NPT End Connection) with Standard Actuator Envelope Dimensions Inches (mm)
(with common stem diameter) (Refer to Figure 2 on Page 13)

Valve Size	Pressure Rating	Actuator Size	A	B	C*	D		E
						DFC	DFO	
1 Inch	ASME Class 600 NPT	1046	8.25 (210)	2.38 (60)	5.00 (127)	23.78 (604)	22.31 (567)	11.38 (289)
		1069	8.25 (210)	2.38 (60)	5.00 (127)	27.68 (703)	24.25 (616)	13.12 (333)
1-1/2 Inch	ASME Class 600 NPT	1046	9.88 (251)	2.81 (71)	4.88 (124)	23.66 (601)	22.19 (564)	11.38 (289)
		1069	9.88 (251)	2.81 (71)	4.88 (124)	27.56 (700)	24.13 (613)	13.12 (333)
2 Inch	ASME Class 600 NPT	2069	11.25 (286)	3.06 (78)	6.50 (165)	29.88 (759)	27.70 (704)	13.12 (333)
		2105	11.25 (286)	3.06 (78)	6.50 (165)	36.75 (933)	32.22 (818)	16.00 (406)
		2156	11.25 (286)	3.06 (78)	6.50 (165)	36.75 (933)	32.22 (818)	18.62 (406)

***NOTE:** 'C' dimensions (and 'D' dimensions) will vary depending on valve stem diameter, refer to Tables 12 to 19.

Table 15

Valve Dimensions for Standard Bonnet Assembly - Inches (mm) (Refer to Figure 2, Page 13)
With all valve trim except Anti-Cavitation 2 Stage.

Valve Size (Inch)	C			
	3/8 (9.5) Stem Diameter	**1/2 (12.7) Stem Diameter**	**3/4 (19.1) Stem Diameter**	**1 (25.4) Stem Diameter**
1	5.00 (127)	5.88 (149)	—	—
1-1/2	4.88 (124)	5.75 (146)	—	—
2	—	6.50 (165)	6.38 (162)	—
3	—	7.50 (191)	7.38 (187)	—
4	—	8.69 (221)	8.56 (217)	—
6	—	—	9.88 (251)	10.62 (270)
6(1)	—	—	12.26 (312)	13.00 (330)
8	—	—	Refer to Style 1 in Table 17	
NOTES:	1 - Dimensions for Low-Noise trim.			

Table 16

Valve Dimensions for Standard Bonnet Assembly with Anti-Cavitation 2 Stage Trim
Inches (mm) (Refer to Figure 2, Page 13)

Valve Size (Inch)	C		
	1/2 (12.7) Stem Diameter	**3/4 (19.1) Stem Diameter**	**1 (25.4) Stem Diameter**
1	7.25 (184)	—	—
1-1/2	6.97 (177)	—	—
2	7.91 (201)	7.78 (198)	—
3	10.22 (260)	10.09 (256)	—
4	12.25 (311)	12.12 (308)	13.94 (354)
6	—	13.22 (336)	14.97 (380)
8	—	—	22.82 (580)

Table 17

Extension Bonnet Valve Dimensions - Inches (mm) (Refer to Figure 2, Page 13)
For Anti-Cavitation 2 Stage Dimensions refer to Table 16.

Valve Size (Inch)	C						
	Stem Diameter Inch (mm)						
	Style 1 - Standard for 8 inch				Style 2		
	3/8 (9.5)	1/2 (12.7)	3/4 (19.1)	1 (25.4)	3/8 (9.5)	1/2 (12.7)	3/4 (19.1)
1	8.38 (213)	9.88 (251)	—	—	11.94 (303)	12.56 (319)	—
1-1/2	8.25 (210)	9.75 (248)	—	—	11.81 (300)	12.44 (316)	—
2	—	10.50 (267)	10.69 (272)	—	—	18.31 (465)	—
3	—	11.50 (292)	11.69 (297)	—	—	19.50 (495)	19.19 (487)
4	—	12.69 (322)	12.88 (327)	14.56 (370)	—	20.69 (526)	20.38 (518)
6	—	—	14.06 (357)	15.81 (402)	—	—	21.38 (543)
6(1)	—	—	16.44 (418)	18.19 (462)	—	—	23.76 (604)
8	—	—	16.56 (421)	17.75 (451)	—	—	24.44 (621)
NOTES:	1 - Dimensions for Low-Noise trim.						

Table 18

Valve Dimensions for Angle Body Standard Bonnet Assembly - Inches (mm) (Refer to Figure 2, Page 13)

Valve Size (Inch)	C			
	3/8 (9.5) Stem Diameter	1/2 (12.7) Stem Diameter	3/4 (19.1) Stem Diameter	1 (25.4) Stem Diameter
1	4.38 (111)	5.25 (133)	—	—
2	3.88 (99)	4.75 (121)	—	—
3	—	5.88 (149)	5.75 (146)	—
4	—	5.50 (140)	5.38 (137)	—
6	—	7.00 (178)	6.87 (175)	8.69 (221)

Table 19

Valve Dimensions for Angle Body Extension Bonnet Assembly - Inches (mm) (Refer to Figure 2, Page 13)

Valve Size (Inch)	C					
	Stem Diameter Inch (mm)					
	Style 1			Style 2		
	3/8 (9.5)	1/2 (12.7)	3/4 (19.1)	3/8 (9.5)	1/2 (12.7)	3/4 (19.1)
1	7.75 (197)	9.95 (253)	—	11.44 (291)	12.00 (305)	—
2	7.25 (184)	8.75 (222)	—	10.94 (278)	11.44 (291)	—
3	—	9.88 (251)	10.06 (256)	—	17.88 (454)	—
4	—	9.50 (241)	9.69 (170)	—	17.50 (445)	17.19 (437)
6	—	11.00 (279)	11.19 (284)	—	19.00 (483)	18.69 (475)

NOTE: For Low-Temperature bonnet dimensions, consult Dyna-Flo.

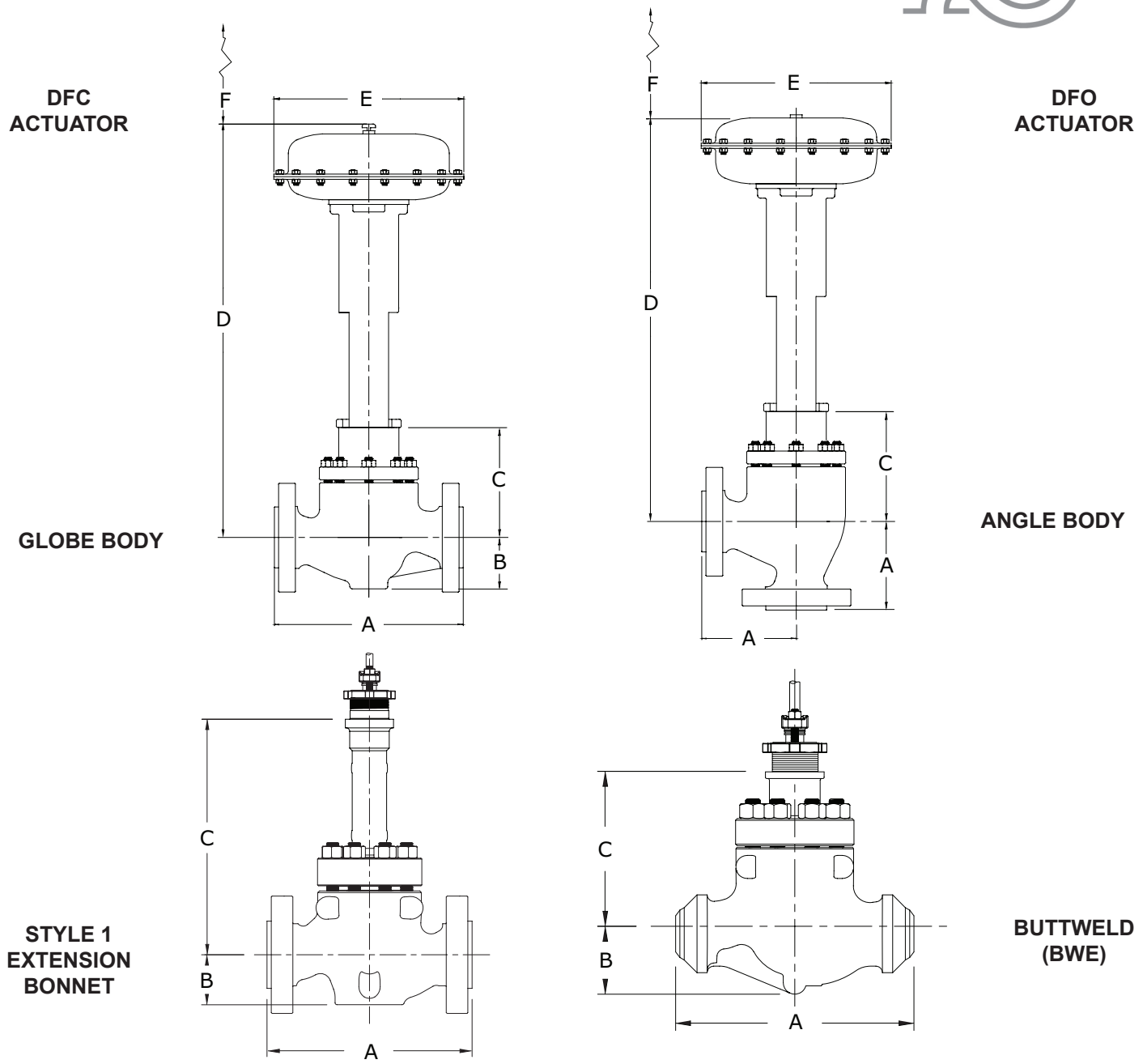

F Dimension	
1 - 2” Valve - 6.88” (175 mm)	4” Valve - 9.12” (232 mm)
3” Valve - 6.88” (175 mm)	6” Valve - 9.12” (232 mm)
3” Valve - 9.12” (232 mm) For DFC/DFO 3156	

Figure 2 *Typical Valve Assembly Diagrams*

Figure 3 *Cross-section of 360 Series Control Valve Standard Construction*

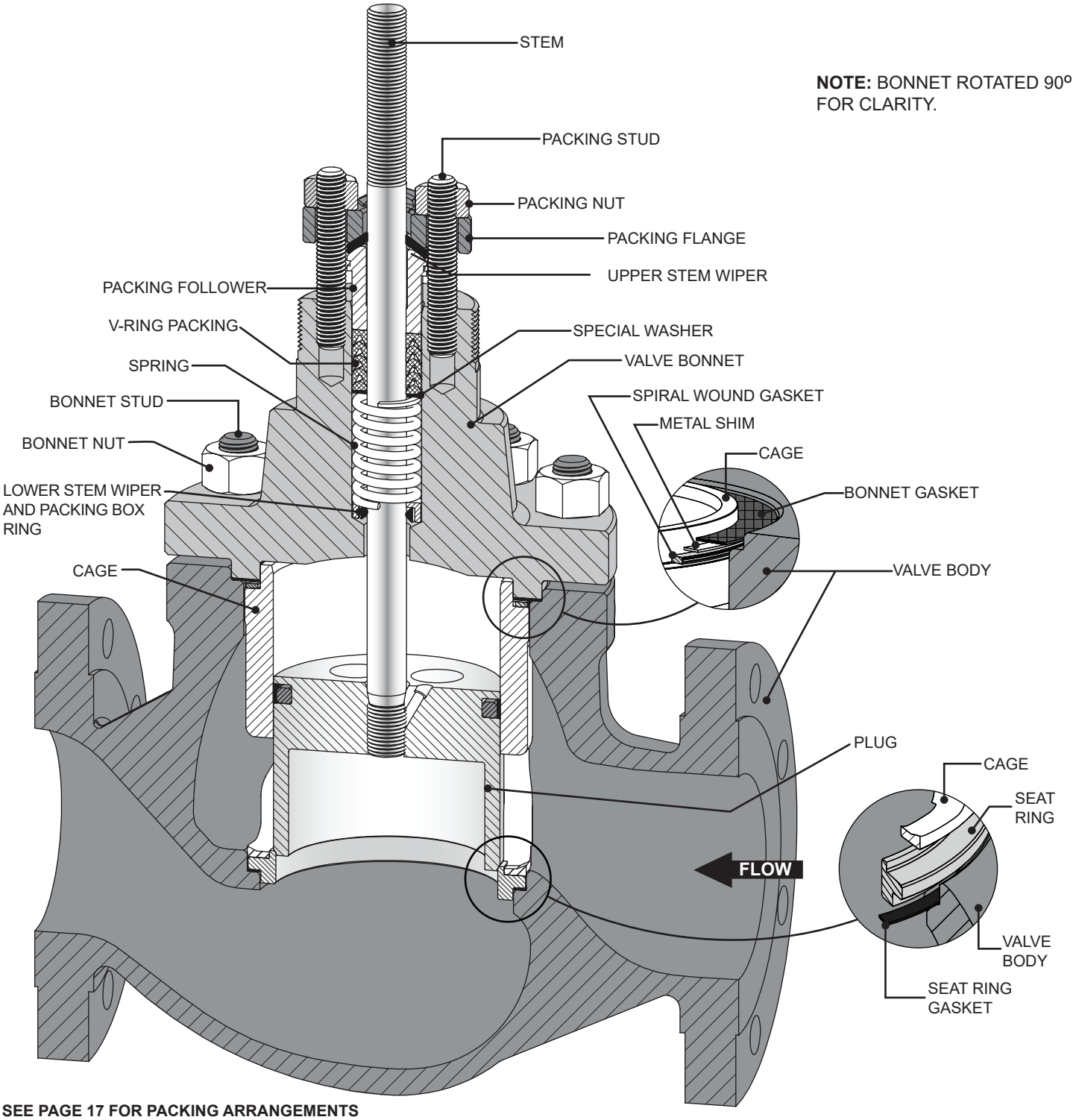

SEE PAGE 17 FOR PACKING ARRANGEMENTS

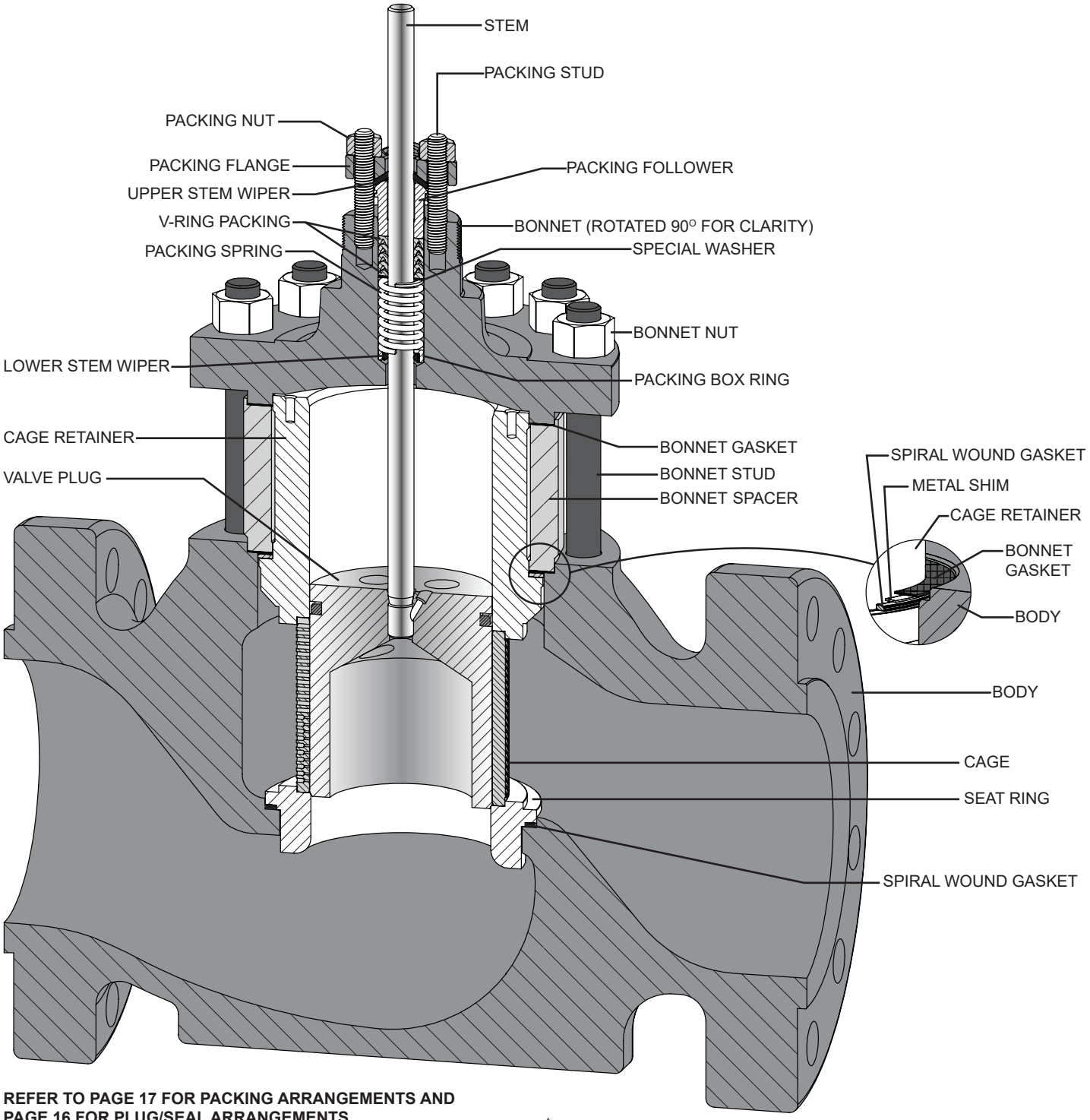

REFER TO PAGE 17 FOR PACKING ARRANGEMENTS AND PAGE 16 FOR PLUG/SEAL ARRANGEMENTS.

Figure 4 *Cross-section of 360 Series Control Valve Low-Noise Construction*

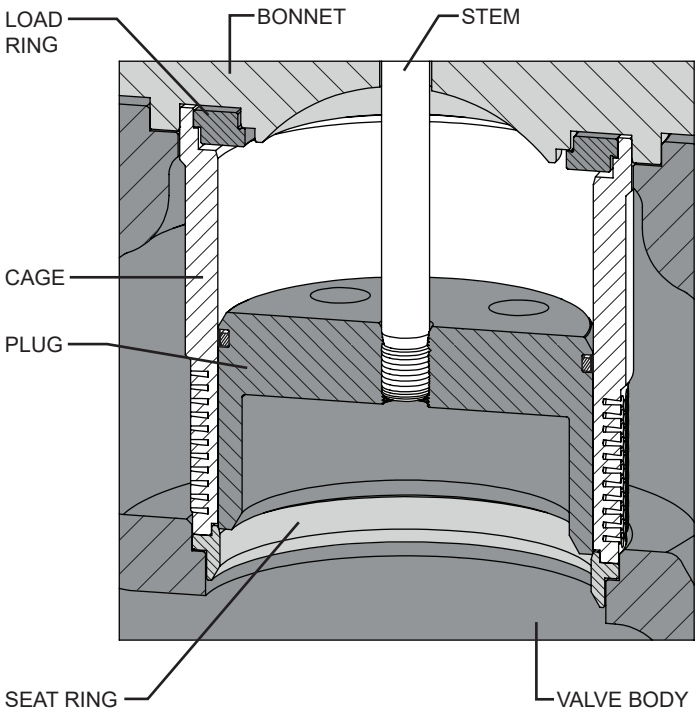

Figure 5 *8 Inch Anti-Cavitation Valve Assembly With Load Ring Detail*

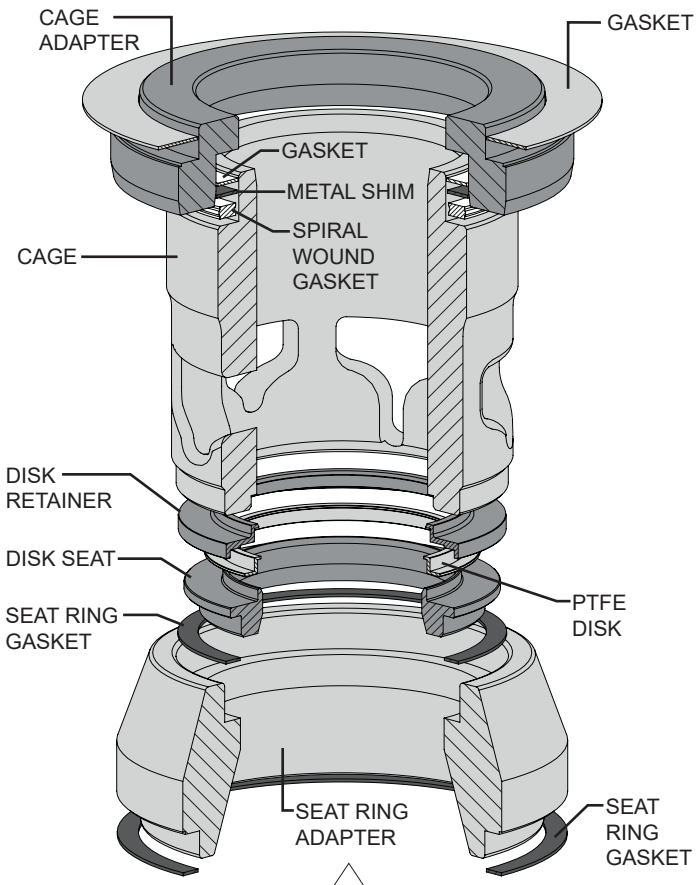

Figure 6 *Reduced Trim Assembly Diagram*

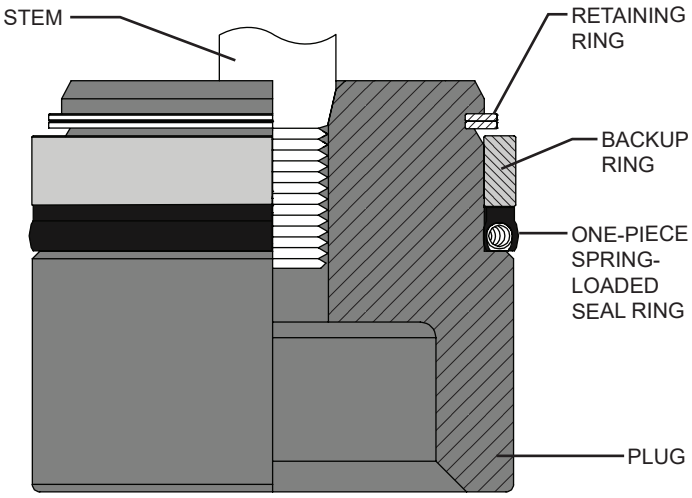

Figure 7 *Spring-Loaded Plug Seal Arrangement*

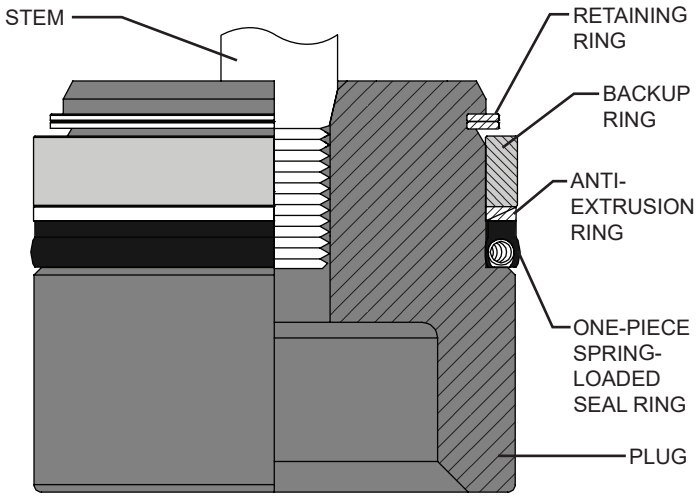

Figure 8 *Spring-Loaded Plug Seal with Anti-Extrusion Ring*

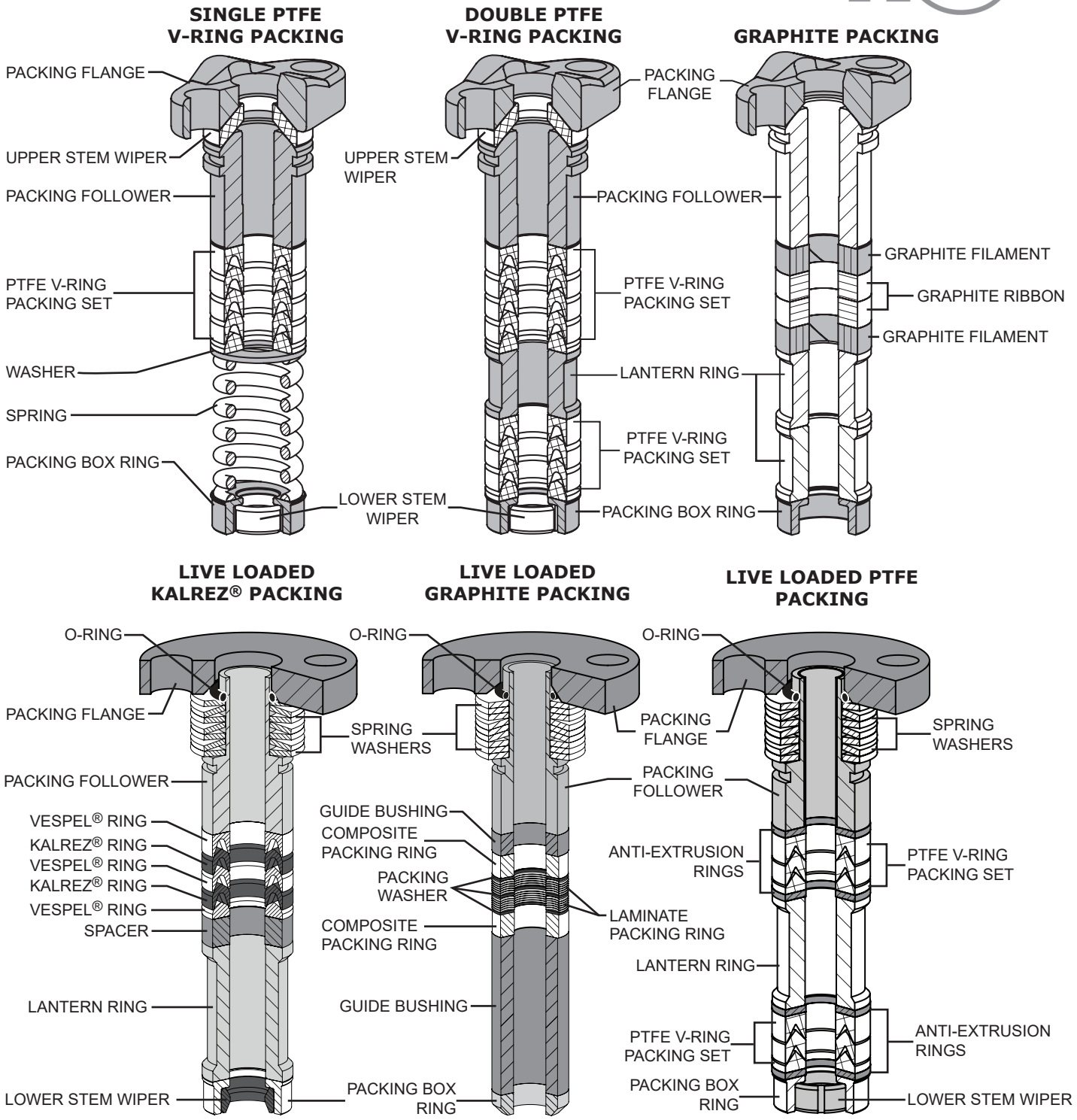

Figure 9 *Typical Packing Arrangements*

Table 20

Common Valve Parts Typical Construction Materials and Temperature Limitations

Part		Material	Temperature Limitations			
			Min. ºF	Max. ºF	Min. ºC	Max. ºC
Valve Stem		S20910	NLF(4)	NLF(4)	NLF(4)	NLF(4)
Load Ring (8 Inch Valves Only)		S17400	NLF(4)	NLF(4)	NLF(4)	NLF(4)
Cage Adapter (Reduced Trim)		S31600/S31603 Dual Grade	NLF(4)	NLF(4)	NLF(4)	NLF(4)
		A350 Grade LF2	-50	650	-46	343
Seat Ring Adapter (Reduced Trim)		S31600/S31603 Dual Grade	NLF(4)	NLF(4)	NLF(4)	NLF(4)
		A350 Grade LF2	-50	650	-46	343
Two-Piece Valve Plug Seal(1)	Backup Ring	Fluoroelastomer (Viton)(6)	0	400	-18	204
		Ethylene Propylene(7)	-50	450	-46	232
	Seal Ring	Carbon-filled PTFE (Standard)	-100	450	-73	232
Spring-Loaded (Three-Piece) Valve Plug Seal(2)(3)	Backup Ring(3)	S31600/S31603 Dual Grade	NLF(4)	NLF(4)	NLF(4)	NLF(4)
	Seal Ring	Carbon-filled PTFE / Elgiloy	-100	450	-73	232
	Retaining Ring(3)	S31600	NLF(4)	NLF(4)	NLF(4)	NLF(4)
Spring-Loaded (Three-Piece) Valve Plug Seal with Anti-Extrusion Rings(3)	Anti-Extrusion Ring(3)	PolyEtherEtherKetone (PEEK)	NLF(4)	NLF(4)	NLF(4)	NLF(4)
	Backup Ring(3)	S31600/S31603 Dual Grade	NLF(4)	NLF(4)	NLF(4)	NLF(4)
	Seal Ring	Carbon-filled PTFE / Elgiloy	-100	600	-73	319
	Retaining Ring(3)	S31600	NLF(4)	NLF(4)	NLF(4)	NLF(4)
Seat Ring / Bonnet / Cage Gaskets		S31600 / Graphite	NLF(4)	NLF(4)	NLF(4)	NLF(4)
Spiral Wound Gaskets		S30400 / Graphite	-50	650	-46	343
		N06600 / Graphite (High Temp.)	NLF(4)	NLF(4)	NLF(4)	NLF(4)
Shim		S30400	NLF(4)	NLF(4)	NLF(4)	NLF(4)
Disk		PTFE	-100	400	-73	204
Disk Seat		S31600/S31603 Dual Grade	NLF(4)	NLF(4)	NLF(4)	NLF(4)
Disk Retainer		S31600/S31603 Dual Grade	NLF(4)	NLF(4)	NLF(4)	NLF(4)
Packing		PTFE V-Ring	-50	450	-46	232
		Graphite (Ribbon/Filament)	-325	1000(5)	-198	537(5)

NOTES:

1 - Standard for 1 to 6 inch valves except those with Anti-Cavitation trim.

2 - Standard for 8 inch valves and 1 to 6 inch valves with Anti-Cavitation trim. Optional for 1 to 6 inch valves with trim other than Anti-Cavitation.

3 - Do not use with 7 inch or greater port sizes, 8 inch valve assemblies utilize a seal ring only. Anti-extrusion rings will allow for a maximum temperature limitation of 600ºF (316ºC).

4 - NLF - This Material is Not A Limiting Factor. For the temperature limitation refer to the valve body material temperature limit.

5 - Oxidizing service limited to 700ºF (371ºC).

6 - Recommended for high-temperature air, hydrocarbons, and some chemicals/solvents. Not recommended for water above 180ºF (82ºC). Do not use with ammonia or steam.

7 - Recommended for hot water and steam. May be used with most fire-resistant hydraulic oils. Do not use with petroleum-based fluids and other hydrocarbons.

Table 21

Body to Bonnet Bolting Temperature Limitations

Body Material	ASME Class	Bolt/Nut Material	Temperature Limitations			
			Min. ºF	Max. ºF	Min. ºC	Max. ºC
LCC	150/300/600	B7/2H(1)(2)	-50	650	-46	343
		B7M/2HM(3)	-50	650	-46	343
WCC/WC9	150/300/600	B7/2H(1)(2)	-20	800	-29	427
		B7M/2HM(3)	-20	800	-29	427
CF8M	150/300/600	B7 Fluorokote #1 / 2H Fluorokote #1 (Standard)(2)	-50	500	-46	260
		B8M/8M(2)	-325	800	-198	427
		B7M Fluorokote #1/ 2HM Fluorokote #1(3)	-50	500	-46	260

NOTES:

1 - Standard non-NACE option.

2 - NACE MR0175/ISO15156 Non-Exposed Bolting option (Bolting that is not directly exposed to sour environments and is not to be buried, insulated, equipped with flange protectors, or otherwise denied direct atmospheric exposure).

3 - NACE MR0175/ISO15156 Exposed Bolting option (Bolting that will be exposed directly to the sour environment or that will be buried, insulated, equipped with flange protectors, or otherwise denied direct atmospheric exposure).

Table 22

Bonnet and Packing Selection(1)

Bonnet Style	Packing Material	In-Body Process Temperature Limitations
Standard Bonnet: Standard for valve sizes 1 through 6 inch.	PTFE V-Ring	0ºF to 450ºF (-18ºC to 232ºC)
	Graphite (Ribbon/Filament)	0ºF to 600ºF (-18ºC to 316ºC)(2)
Extension Bonnet Style 1: Standard for 8 inch valves. Optional for valve sizes 1 through 6 inch.	PTFE V-Ring	-50ºF to 600ºF (-46ºC to 316ºC)(2)
	Graphite (Ribbon/Filament)	
Extension Bonnet Style 2: Optional for 1 though 8 inch valve sizes.	PTFE V-Ring	-150ºF to 600ºF (-101ºC to 316ºC)(2)
	Graphite (Ribbon/Filament)	

1 The above temperatures assume the presence of an ambient temperature outside the valve body of 70ºF (21ºC) with no bonnet insulation. An extension bonnet may be required when operating valves in low temperatures to prevent damage that could occur from the formation of valve stem frost. Other limiting factors, such as trim material components, will have to be considered. Refer to the Live Loaded Sliding Stem Packing Manual (Part Number P-LLPS) for Live Loaded packing temperature limitations.

2 PEEK anti-extrusion rings and spring-loaded seal rings are required for temperatures above 450ºF (232ºC)

NOTE: For temperatures above or below these standard temperatures consult Dyna-Flo.

Table 23

Standard Trim Options **(Refer to Figures 10A to 10D for Pressure / Temperature Limits)**

Trim Spec	Valve Plug	Stem	Cage	Seat Ring	Service
D1	S41600 HT	S20910	S17400 H900	S41600 HT	Standard / Non-corrosive
Characteristics:	Equal Percentage / Linear / Quick Opening / Low-Noise				
D2	S31600(2) / Alloy 6 Hard Faced Seat	S20910	S17400 DH1150(1)	S31600(2) / Alloy 6 Hard Faced Seat	Corrosive / NACE(3)
Characteristics:	Equal Percentage / Linear / Quick Opening				
D4	S31600(2)	S20910	S17400 H900	S31600(2)	General / Mild Corrosive
Characteristics:	Equal Percentage / Linear / Quick Opening / Low-Noise				
D5	S41600 HT	S20910	S17400 H900	S31600(2) / PTFE	Standard / Non-corrosive / Tight Shut off
Characteristics:	Equal Percentage / Linear / Quick Opening / Low-Noise				
D6	S31600(2) / Alloy 6 Hard Faced Seat & Guide	S20910	S17400 H900	S31600(2) / Alloy 6 Hard Faced Seat	Standard / Mild Corrosive / Mild Erosive
Characteristics:	Equal Percentage / Linear / Quick Opening / Low-Noise / Anti-Cavitation				
D7	S31600(2) / Alloy 6 Hard Faced Seat & Guide	S20910	S17400 DH1150	S31600(2) / Alloy 6 Hard Faced Seat	Corrosive / NACE(3) / Mild Erosive
Characteristics:	Equal Percentage / Linear / Quick Opening / Low-Noise / Anti-Cavitation				
D8	S31600(2)	S20910	S17400 DH1150(1)	S31600(2)	NACE(3) / Corrosive
Characteristics:	Equal Percentage / Linear / Quick Opening / Low-Noise				
D9	S31600(2)	S20910	S17400 DH1150(1)	S31600(2) / PTFE	NACE(3) / Corrosive / Tight Shut off
Characteristics:	Equal Percentage / Linear / Quick Opening / Low-Noise				
DL	S42000 HT	S20910	S17400 H900	S17400 H900	Anti-Cavitation
Characteristics:	Anti-Cavitation				
DJ	S31600(2)	S20910	S31600(2) / ENC	S31600(2)	NACE(3)
Characteristics:	Equal Percentage / Linear / Quick Opening / Low-Noise				
DT	S31600(2)	S20910	S31600(2) / ENC	S31600(2) / PTFE	NACE(3)
Characteristics:	Equal Percentage / Linear / Quick Opening / Low-Noise				
DC	S31600(2) / Alloy 6 Hard Faced Seat	S20910	S31600(2) / ENC	S31600(2) / Alloy 6 Hard Faced Seat	NACE(3)
Characteristics:	Equal Percentage / Linear / Quick Opening / Low-Noise				
DE	S31600(2) / Alloy 6 Hard Faced Seat & Guide	S20910	S31600(2) / ENC	S31600(2) / Alloy 6 Hard Faced Seat	NACE(3)
Characteristics:	Equal Percentage / Linear / Quick Opening / Low-Noise				
DN	S31600(2) / Alloy 6 Hard Faced Seat & Guide	S20910	S31600(2) / ENC	S31600(2)	NACE(3) Class VI Soft Metal
Characteristics:	Equal Percentage / Linear / Quick Opening / Low-Noise				
DR	S31600(2) / Alloy 6 Hard Faced Seat & Guide	S20910	S17400 DH1150	S31600(2)	NACE(3) Class VI Soft Metal
Characteristics:	Equal Percentage / Linear / Quick Opening / Low-Noise				

NOTE:

1 - S31600 (ENC)* available by special request (*Electroless Nickel Coating).

2 - All S31600 barstock is dual grade S31600/S31603 (316/316L).

3 - Metal trim parts compatible with NACE MR0175/ISO 15156. Environmental restrictions may apply.

Table 24

High Temperature Trim Options **(Refer to Figures 10A to 10D for Pressure / Temperature Limits)**

Trim Spec	Valve Plug	Stem	Cage	Seat Ring	Service
D2H	S31600(1) / Alloy 6 Hard Faced Seat	S20910	S17400 DH1150	S31600(1) / Alloy 6 Hard Faced Seat	Corrosive / NACE(3)
Characteristics:	Equal Percentage / Linear / Quick Opening				
D4H	S31600(1)	S20910	S17400 PH	S31600(1)	General / Mild Corrosive
Characteristics:	Equal Percentage / Linear / Quick Opening / Low-Noise				
D6H	S31600(1) / Alloy 6 Hard Faced Seat & Guide	S20910	S17400 PH	S31600(1) / Alloy 6 Hard Faced Seat	Standard / Mild Corrosive / Mild Erosive
Characteristics:	Equal Percentage / Linear / Quick Opening / Low-Noise / Anti-Cavitation				
D7H	S31600(1) / Alloy 6 Hard Faced Seat & Guide	S20910	S17400 DH1150	S31600(1) / Alloy 6 Hard Faced Seat	Corrosive / NACE(3) / Mild Erosive
Characteristics:	Equal Percentage / Linear / Quick Opening / Low-Noise / Anti-Cavitation				
D8H	S31600(1)	S20910	S17400 DH1150	S31600(1)	NACE(3) / Corrosive
Characteristics:	Equal Percentage / Linear / Quick Opening / Low-Noise				

NOTE:

1 - All S31600 barstock is dual grade S31600/S31603 (316/316L).

2 - Metal trim parts compatible with NACE MR0175/ISO 15156. Environmental restrictions may apply.

Table 25

Class VI Shut-Off Trim Options **(Refer to Figures 10A to 10D for Pressure / Temperature Limits)**

Valve Plug	Stem	Cage	Seat Ring	Seal Ring	Temperature Limit
S41600 HT	S20910	S17400 H900	S31600(2) / PTFE	PTFE/R30003	-20ºF to 150ºF (-29ºC to 66ºC)
S31600(2)	S20910	S31600(2) / ENC(1)	S31600(2) / PTFE	PTFE/R30003	-20ºF to 150ºF (-29ºC to 66ºC)
S31600(2) / Alloy 6 Hard Faced Seat	S20910	S31600(2) / ENC(1)	S31600(2)	PTFE/R30003	-50ºF to 150ºF (-46ºC to 66ºC)

NOTE:

1 - S31600 (ENC)* available by special request (*Electroless Nickel Coating).

2 - All S31600 barstock is dual grade S31600/S31603 (316/316L).

Table 26

Valve Body/Standard Trim Option Temperature Limitations
(Refer to Figures 10A to 10D for Pressure/Temperature limits)

Body Material	Trim Designation	Temperature Limitations			
		Min. ºF	Max. ºF	Min. ºC	Max. ºC
LCC	D1	-20	600(1)	-29	316(1)
	D2, D4, D6, D7, D8, DR	-50	450	-46	232
	D5	-20	400	-29	204
	D9	-50	400	-46	204
	DC, DE, DN	-50	600(1)	-46	343(1)
	DJ	-50	450(2)	-46	232(2)
	DT	-50	400	-46	204
CF8M	DC, DE, DN	-325	600(1)	-198	316(1)
	DJ	-325	450(2)	-198	232(2)
WCC	D1	-20	600	-29	316
	D2, D4, D6, D7, D8, DR	-20	450	-29	232
	D5	-20	400	-29	204
	D9	-20	400	-29	204
	DC, DE, DN	-20	600(1)	-29	316(1)
	DJ	-20	450	-29	232
	DT	-20	400	-29	204
WC9	D1	-20	600(1)	-29	316(1)
	D2, D4, D6, D7, D8, DR	-20	450	-29	232
	D5, D9, DT	-20	400	-29	204
	DC, DE, DN	-20	600(1)	-29	316(1)
	DJ	-20	450(2)	-29	232(2)

NOTES:

1 - Temperatures above 450°F (232°C) require PEEK anti-extrusion rings and a spring loaded seal ring. This allows a max temperature of 600°F (316°C) for non-oxidizing service and 500°F (260°C) for oxidizing service.

2 - Maximum temperature limited to 300°F (149°C) for non-lubricating service such as steam or dry gas.

Table 27

Valve Body/Standard Trim Option Temperature Limitations for Anti-Cavitation

Body Material	Trim Designation	Temperature Limitations			
		Min. ºF	Max. ºF	Min. ºC	Max. ºC
LCC	DL	-20	600(1)	-29	316(1)
CF8M	DL - 1", 1-1/2", 2"	-20	600(1)	-29	316(1)
	DL - 3"	-20	420	-29	216
	DJ - 4", 6", 8"	-20	350	-29	177
WCC	DL	-20	600(1)	-29	316(1)
WC9	DL	-20	600(1)	-29	316(1)

NOTES:

1 - Temperatures above 450°F (232°C) require PEEK anti-extrusion rings and a spring loaded seal ring. This allows a max temperature of 600°F (316°C) for non-oxidizing service and 500°F (260°C) for oxidizing service.

Table 28

Valve Body/High Temperature Trim Option Temperature Limitations(1)

Body Material	Trim Designation(2)	Temperature Limitations			
		Min. ºF	Max. ºF	Min. ºC	Max. ºC
LCC	D2H, D4H, D6H, D7H, D8H	450	600(1)	232	316(1)
WCC	D2H, D4H, D6H, D7H, D8H	450	600(1)	232	316(1)
WC9	D2H, D4H, D6H, D7H, D8H	450	600(1)	232	316(1)

NOTES:

1 - Temperatures above 450°F (232°C) require PEEK anti-extrusion rings and a spring loaded seal ring. This allows a max temperature of 600°F (316°C) for non-oxidizing service and 500°F (260°C) for oxidizing service.

2 - High Temperature Trim is not to be used in non-lubricating service such as steam or dry gas.

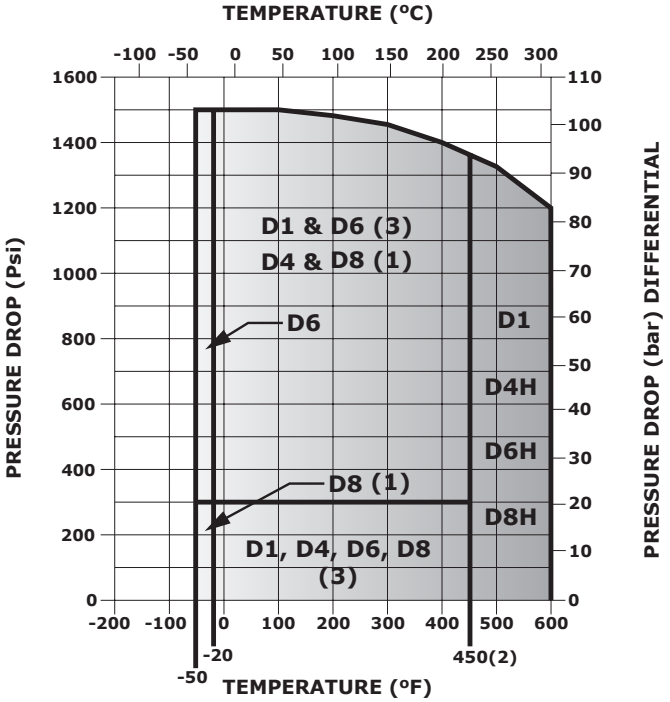

TRIM D1, D4, D6, D8, D4H, D6H, & D8H - METAL SEATING WITH ASME CLASS 600 LCC BODY

Figure 10A
Trim D1, D4, D6, D8, D4H, D6H, & D8H Pressure and Temperature Limitations

NOTES:	**1**	Trim can be used to 1,440 Psi (99.3 bar) when used with clean dry gas. When used with other process fluids, do not exceed 300 Psi (20.7 bar).
	2	Trim temperature limitations can be extended to 600°F (316°C) when used for non-oxidizing service or 500°F (260°C) with oxidizing service when using PEEK anti-extrusion rings and spring-loaded seal rings.
	3	Temperatures above 450°F (232°C) require a spring-loaded seal ring and PEEK anti-extrusion rings.

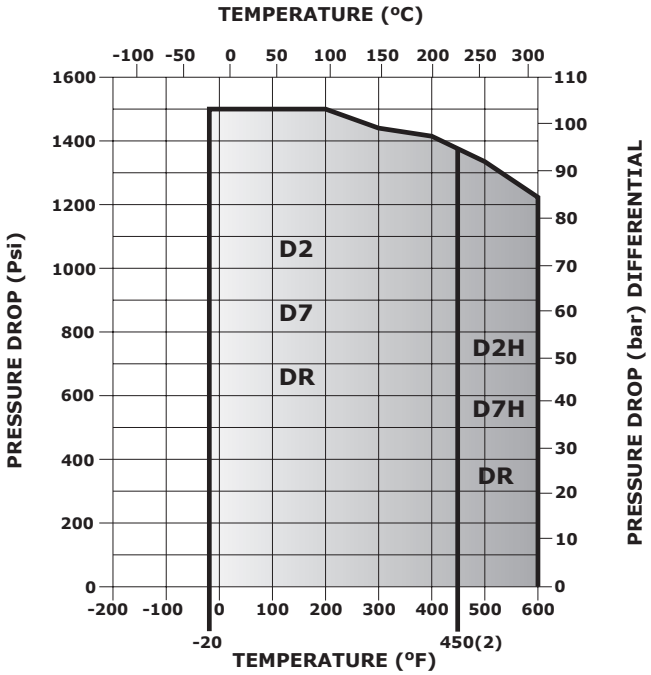

TRIM D2, D7, DR, D2H, & D7H - FOR METAL SEATING WITH ASME CLASS 600 WCC OR WC9 BODY (TRIM DL WITH ANTI-CAVITATION TRIM FOR ALL VALVE BODIES)

Figure 10B
Trim D2, D7, DR, D2H, D7H, & DR Pressure and Temperature Limitations

NOTES:	**2**	Trim temperature limitations can be extended to 600°F (316°C) when used for non-oxidizing service or 500°F (260°C) with oxidizing service when using PEEK anti-extrusion rings and spring-loaded seal rings.

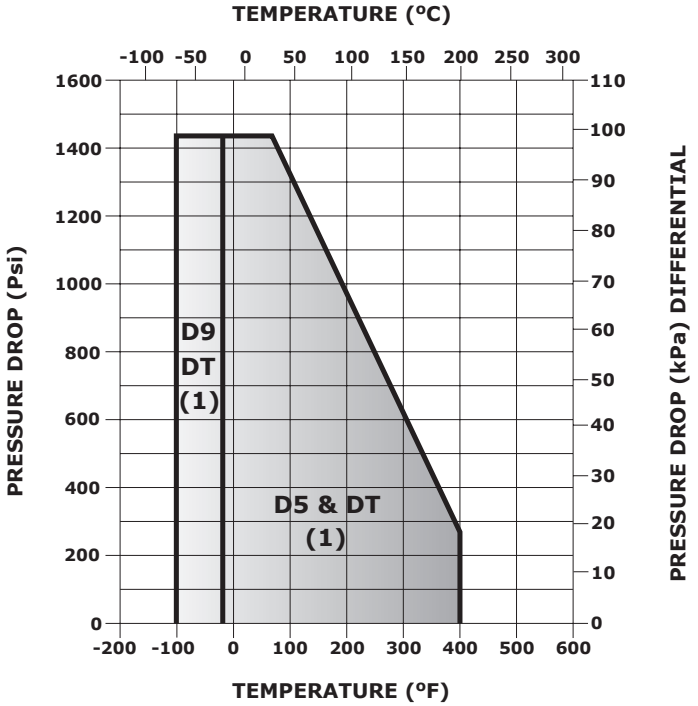

TRIM D5, D9, & DT - PTFE SEATED VALVES

Figure 10C
Trim D5, D9, & DT
Pressure and Temperature Limitations

NOTES:	**1**	Trim can be used to 1,440 Psi (99.3 bar) when used with clean dry gas. When used with other process fluids, do not exceed 300 Psi (20.7 bar).

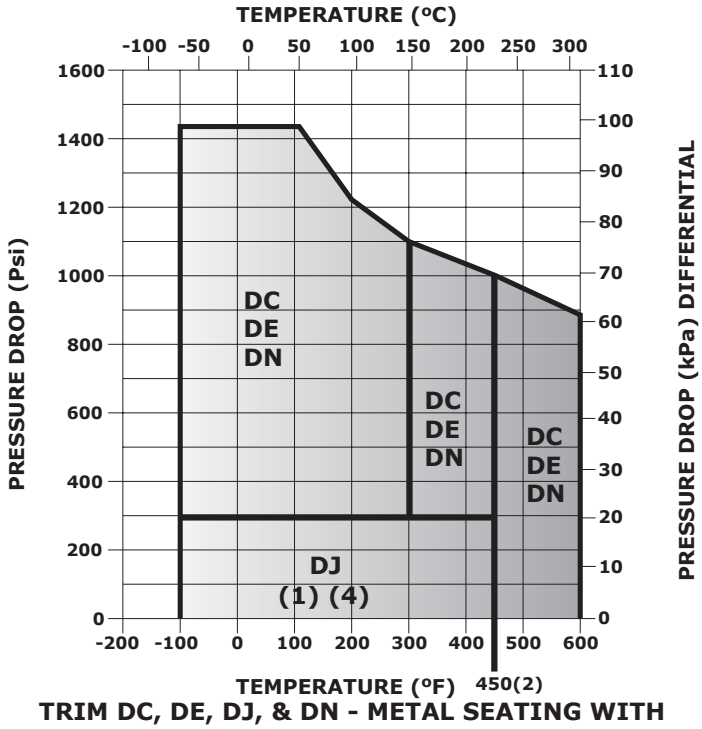

TRIM DC, DE, DJ, & DN - METAL SEATING WITH ASME CLASS 600 CF8M BODY

Figure 10D
Trim DE, DJ, & DN
Pressure and Temperature Limitations

NOTES:	**1**	Trim can be used to 1,440 Psi (99.3 bar) when used with clean dry gas. When used with other process fluids, do not exceed 300 Psi (20.7 bar).
	2	Trim temperature limitations can be extended to 600°F (316°C) when used for non-oxidizing service or 500°F (260°C) with oxidizing service when using PEEK anti-extrusion rings and spring-loaded seal rings.
	4	Use other trim for non-lubricating fluids (such as dry gas or steam) between 300°F (149°C) and 450°F (232°C).

Table 29

MAXIMUM SIZING COEFFICIENTS

FULL PORT
EQUAL PERCENTAGE CHARACTERISTIC
GLOBE BODY VALVE
FLOW DOWN

Valve Size Inches	Port Inches (mm)	Travel Inches (mm)	Coefficient	Percentage of Valve Travel 100%
1	1-5/16 (33.3)	3/4 (19.1)	C_V	17.2
1-1/2	1-7/8 (47.6)	3/4 (19.1)	C_V	35.8
2	2-5/16 (58.7)	1-1/8 (28.6)	C_V	59.7
3	3-7/16 (87.3)	1-1/2 (38.1)	C_V	136
4	4-3/8 (111.1)	2 (50.8)	C_V	224
6	7 (177.8)	2 (50.8)	C_V	394
8	8 (203.2)	2 (50.8)	C_V	567
	8 (203.2)	3 (76.2)	C_V	818

NOTE: For the complete list of sizing coefficients refer to catalogue P-CVSM.

Table 30

MAXIMUM SIZING COEFFICIENTS

FULL PORT
EQUAL PERCENTAGE CHARACTERISTIC
ANGLE BODY VALVE
FLOW DOWN

Valve Size Inches	Port Inches (mm)	Travel Inches (mm)	Coefficient	Percentage of Valve Travel 100%
2	1-7/8 (47.6)	3/4 (19.1)	C_V	47.2
3	2-7/8 (73.0)	1-1/2 (38.1)	C_V	148
4	3-7/16 (87.3)	1-1/2 (38.1)	C_V	156
6	4-3/8 (111.1)	2 (50.8)	C_V	328

NOTE: For the complete list of sizing coefficients refer to catalogue P-CVSM.

Our Commitment to Quality

Curtiss-Wright Flow Control Company Canada is committed to continuous improvement. While all efforts have been made to ensure the accuracy of the content in this document, modifications or improvements to the information, specifications, and designs may occur at any time without notice. This document was published for informational purposes only, and does not express or imply suitability, a warranty,
or guarantee regarding the products or services described herein or their use or applicability.

Neither Curtiss-Wright Flow Control Company, nor any of their affiliated entities assumes responsibility for the selection, use and maintenance of any product. Responsibility for selection, use and maintenance of any product remains with the purchaser and end-user.

Model 360 Control Valves

MODEL NUMBERING SYSTEM

SAMPLE PART NUMBER: 360-3AFL-5FP2-VES4

								BODY STYLE
-	GLOBE	A	ANGLE	E	GLOBE PED 2014/68/EU	EA	ANGLE PED 2014/68/EU	-
								VALVE SIZE
1	1 INCH	5	1-1/2 INCH	2	2 INCH	3	3 INCH	3
4	4 INCH	6	6 INCH	8	8 INCH			
								ASME RATING
A	150	B	300	C	600			A
								END CONNECTION
F	RF	J	RTJ	N	NPT	T	BWE SCH 40	F
L	BWE SCH 80	S	SOCKET WELD					
								BODY MATERIAL
L	LCC	W	WCC	M	CF8M	9	WC9	L
								BOLTING
-	B7 / 2H (STANDARD)			A	B7M / 2HM			-
B	B8M / 8M			K	B7 FLUOROKOTE #1 / 2H FLUOROKOTE #1			
L	B7M FLUOROKOTE #1 / 2HM FLUOROKOTE #1							
								TRIM
1	TRIM D1	2	TRIM D2	4	TRIM D4	5	TRIM D5	5
6	TRIM D6	7	TRIM D7	8	TRIM D8	9	TRIM D9	
L	TRIM DL	J	TRIM DJ	T	TRIM DT	C	TRIM DC	
E	TRIM DE	N	TRIM DN	R	TRIM DR	2H	TRIM D2H	
4H	TRIM D4H	6H	TRIM D6H	7H	TRIM D7H	8H	TRIM D8H	
								PORT SIZE
F	FULL PORT	R	REDUCED PORT					F
								PACKING STYLE
P	SINGLE PTFE V-RING (PRESSURE)			J	DOUBLE PTFE V-RING (PRESSURE)			P
G	SINGLE GRAPHITE (PRESSURE)			V	DOUBLE PTFE V-RING (VACUUM)			
R	DOUBLE PTFE V-RING (VACUUM / PRESSURE)			L	LIVE LOADED PTFE V-RING (PRESSURE)			
T	LIVE LOADED GRAPHITE (PRESSURE)			D	LIVE LOADED DUPLEX (PRESSURE)			
K	LIVE LOADED KALREZ®							
								YOKE BOSS SIZE
1	2-1/8" (3/8" STEM)	2	2-13/16" (1/2" STEM)	3	3-9/16" (3/4" STEM)	5	5" (1" STEM)	2
								PAINT
-	DFPS-01 (STANDARD)			2	DFPS-02 (SEVERE SERVICE)			-
3	DFPS-03 (HIGH TEMPERATURE)							
								BACKUP RING / SEAL RING
V	VITON / CARBON-FILLED PTFE			E	EPDM / CARBON-FILLED PTFE			V
C	S31600 / CARBON-FILLED PTFE-ELGILOY			K	S31600 / KEL-F - ELGILOY			
P	CARBON-FILLED PTFE-ELGILOY (8" 360)							
R	S31600 / CARBON-FILLED PTFE-ELGILOY WITH PEEK AE RINGS							
								CHARACTERISTIC
E	EQUAL PERCENT	L	LINEAR	Q	QUICK OPENING			E
A	ANTI-CAVITATION 1 STAGE (LINEAR)			K	ANTI-CAVITATION 2 STAGE (LINEAR)			
Z	LOW-NOISE III A1 (LINEAR)			Y	LOW-NOISE III B3 (LINEAR)			
C	LOW-NOISE III C3 (LINEAR)			1	LOW-NOISE III D1 (LINEAR)			
D	LOW-NOISE III D3 (LINEAR)							
								CHARACTERISTIC (EXTENDED TRAVEL)
R	EQUAL PERCENT - EXTENDED TRAVEL			S	LINEAR - EXTENDED TRAVEL			
T	QUICK OPENING - EXTENDED TRAVEL			W	LOW-NOISE III A1 (LINEAR) - EXTENDED TRAVEL			
V	ANTI-CAVITATION 1 STAGE (LINEAR) -EXTENDED TRAVEL							
4	LOW-NOISE III A1 (LINEAR) EXTENDED 4" TRAVEL (8" VALVE ONLY)							
								BONNET STYLE
S	STANDARD	T	STANDARD TAPPED	E	EXTENSION STYLE 1			S
H	EXTENSION STYLE 2							
								SHUT-OFF CLASS
4	CLASS IV	5	CLASS V	6	CLASS VI			4

360 ___ ___ ___ ___ ___ ___ ___ ___ ___ ___ ___ ___ ___ ___ ___