Dyna-Flo 570 Series

Control Valve Technical Sales Bulletin

Figure 1 Model 571 Control Valve and DFR-070 Actuator

The 570 Series segmented ball rotary control valve is used in demanding oil and gas production applications, as well as chemical process industries. 570 Series are also suited to high flow - low pressure drop services that require throttling and on/off control of liquids or gases.

The flangeless Model 570 valve mates with ASME class 150, 300, and 600 raised face flanges. Models 571 and 573 are raised-face flanged valves for ASME class 150 (571) and 300 (573).

The straight through unrestricted flow path delivers higher capacity flow than globe style valves. And our splined shaft provides accurate control in throttling operations and flexibility in actuation options. The 570 series, when combined with a Model DFR spring and diaphragm actuator, is a rugged control valve assembly, to which a wide variety of positioners and accessories can be mounted.

The Model 570, 571 and 573 control valves are manufactured to a high level of quality specifications to ensure superior performance and customer satisfaction.

Features

NACE Service

Trim materials are available for applications handling sour fluids and gases. These construction materials comply with the recommendations of (NACE) National Association of Corrosion Engineers MR0175.

Easy Maintenance

A unique ball to shaft connection makes for easy disassembly, and reduces packing replacement time as well. Replacing the ball seal is easily done by removing two screws.

Lightweight Installation

The 570 series is a rugged, yet lightweight ball valve that is designed to be easier to handle than sliding stem valves of the same size.

Adjustable Shaft Packing

The shaft to body interface is sealed to atmosphere by externally adjustable PTFE or optional graphite packing rings. Further reduce emissions with the use of Dyna-Flo's Live Loaded PTFE and graphite packing systems.

Industrial High Quality External Coatings

Our standard industrial high quality external coatings provide long lasting resistance to the harshest environments.

Field Reversible

The action of all valve and actuator combinations is easily changed between fail closed and fail open without additional hardware.

Specifications

Sizes and Connection Styles (Refer to Table 1)

Model:	570 / 571 / 573
Size:	1" to 24" NPS 25 DN to 600 DN
Body Style:	Wafer and Flanged
Rating:	ASME 150 / 300 / 600
Connection:	RF

Maximum Inlet Pressures and Temperatures

Consistent with ASME Class 150, 300, and 600 rating as per ASME B16.34, unless limited. Refer to Tables 17 to 19.

Maximum Pressure Drops

Refer to Tables 18 & 19.

750 Psig (5,171 kPag) @ 100°F (38°C) (Standard Construction)

Characteristic and Flow Direction

Modified Equal Percent - Flow Forward through Seal into Ball

NOTE: Reverse flow has a maximum allowable pressure drop of 100 Psi (689 kPa).

Dimensions

Valve Outline Dimension Diagram: Refer to Figure 3.

Valve and Actuator Outline Dimension Diagram: Refer to Figure 2.

Valve and Actuator Assembly Dimensions: Refer to Tables 4 to 15.

Line Flange Bolting Dimensions: Refer to Tables 7, 8, 12 & 13.

Approximate Valve Body and Actuator Weights

Refer to Tables 2 & 3.

Maximum Ball Rotation

90 degrees.

Actuator Mounting

Right-hand, or Left-hand (as viewed from seal end of valve). In one of 4 positions (12 standard, 3, 6, and 9 o'clock) with respect to the valve body in a horizontal pipe.

Valve Cross-Section

Refer to Figures 5 to 11.

Material and Temperature Capabilities

Valve Body:

LCC (ASTM A352): -50°F to 450°F (-46°C to 232°C)

CG8M (ASTM A351): -325°F to 1000°F (-198°C to 538°C)

WCC (ASTM A216): -20°F to 800°F (-29°C to 427°C)

Packing:

PTFE: -50°F to 450°F (-46°C to 232°C)

Graphite: -325°F to 1000°F (-198°C to 538°C)

Live Loaded PTFE: -50°F to 450°F (-46°C to 232°C) for 100 ppm service requirements.

Live Loaded Graphite: 20°F to 600°F (-7°C to 316°C) for 100 ppm service requirements.

20°F to 700°F (-7°C to 371°C) for non-environmental service requirements.

Ball Seals:

Composition Ultra: -50°F to 450°F (-46°C to 232°C)

Metal: -50°F to 550°F (-46°C to 288°C)

Flow Ring: -325°F to 800°F (-198°C to 425°C)

NOTE: Refer to Tables 17 to 19 for more temperature limitations.

Construction Materials

Refer to Table 16.

Shut-Off Classification

Composition Ball Seal: Class VI

Metal Ball Seal: Class IV

Flow Ring Construction: 5% of valve capacity at full travel

NOTE: Classes and testing per ANSI/FCI 70-2 and IEC 60534-4.

Shaft Connections

Splined (Standard)

Square (Optional) for sizes 1 to 6" NPS (25 to 150 DN)

Keyed (Optional) for sizes 8 to 24" NPS (200 to 600 DN)

For more information and other options contact your Dyna-Flo sales office.

Table 1

Available Valve Configurations

Valve Model	End Connection	Body Material	Valve Size inch (DN	Valve Rating
570	Flangeless (Wafer) Mates with ASME Class 150/300/600 Raised Face Flanges	LCC WCC CG8M	1 / 1-1/2 / 2 (25 / 40 / 50)	ASME Class 150/300/600
			3 & 4 (80 & 100)	ASME Class 150
				ASME Class 300/600
			6 & 8 (150 & 200)	ASME Class 150/300/600
571	Flanged Mates with ASME Class 150 Raised Face Flanges	LCC WCC CG8M	1 / 1-1/2 / 2 / 3 / 4 / 6 / 8 / 10 / 12 / 16 / 20 / 24 (25 / 40 / 50 / 80 / 100 / 150 / 200 / 300 / 400 / 500 / 600)	ASME Class 150
573	Flanged Mates with ASME Class 300 Raised Face Flanges	LCC WCC CG8M	1 / 1-1/2 / 2 / 3 / 4 / 6 / 8 / 10 / 12 / 16 / 20 / 24 (25 / 40 / 50 / 80 / 100 / 150 / 200 / 300 / 400 / 500 / 600)	ASME Class 300

Table 2

570 Valve and Actuator Assembly Weights

Valve Size / Actuator Model		Weight
1” NPS (25 DN)	570 Valve Only	10 lbs (4.5 Kg)
	Model 570 Valve & DFR026	40 lbs (18 Kg)
1-1/2” NPS (40 DN)	570 Valve Only	14 lbs (6.4 Kg)
	Model 570 Valve & DFR026	44 lbs (20 Kg)
	Model 570 Valve & DFR047	60 lbs (27 Kg)
2” NPS (50 DN)	570 Valve Only	23 lbs (10 Kg)
	Model 570 Valve & DFR026	53 lbs (24 Kg)
	Model 570 Valve & DFR047	69 lbs (31 Kg)
3” NPS (80 DN)	570 Valve Only	34 lbs (15 Kg)
	Model 570 Valve & DFR047	80 lbs (36 Kg)
4” NPS (100 DN)	570 Valve Only	48 lbs (22 Kg)
	Model 570 Valve & DFR047	94 lbs (43 Kg)
	Model 570 Valve & DFR070	147 lbs (67 Kg)
6” NPS (150 DN)	570 Valve Only	80 lbs (36 Kg)
	Model 570 Valve & DFR156	283 lbs (128 Kg)
8” NPS (200 DN)	570 Valve Only	136 lbs (62 Kg)
	Model 570 Valve & DFR156	339 lbs (154 Kg)
	Model 570 Valve & DFR220	408 lbs (185 Kg)

Table 3

571 & 573 Valve and Actuator Assembly Weights

Valve Size / Actuator model		Model	
		571	573
1” NPS (25 DN)	Valve Only	13 lbs (5.9 Kg)	17 lbs (7.7 Kg)
	DFR026	43 lbs (19.5 Kg)	47 lbs (21 Kg)
1-1/2” NPS (40 DN)	Valve Only	19 lbs (8.6 Kg)	27 lbs (12 Kg)
	DFR026	49 lbs (22 Kg)	57 lbs (26 Kg)
	DFR047	65 lbs (29.5 Kg)	73 lbs (33 Kg)
2” NPS (50 DN)	Valve Only	21 lbs (9.5 Kg)	38 lbs (17 Kg)
	DFR026	51 lbs (23 Kg)	68 lbs (31 Kg)
	DFR047	67 lbs (30 Kg)	84 lbs (38 Kg)
3” NPS (80 DN)	Valve Only	43 lbs (19.5 Kg)	61 lbs (28 Kg)
	DFR047	89 lbs (40 Kg)	107 lbs (49 Kg)
4” NPS (100 DN)	Valve Only	57 lbs (26 Kg)	81 lbs (37 Kg)
	DFR047	103 lbs (47 Kg)	127 lbs (58 Kg)
	DFR070	156 lbs (71 Kg)	145 lbs (66 Kg)
6” NPS (150 DN)	Valve Only	93 lbs (42 Kg)	133 lbs (60 Kg)
	DFR156	296 lbs (134 Kg)	336 lbs (152 Kg)
8” NPS (200 DN)	Valve Only	158 lbs (72 Kg)	226 lbs (103 Kg)
	DFR156	361 lbs (164 Kg)	429 lbs (195 Kg)
	DFR220	430 lbs (195 Kg)	498 lbs (226 Kg)
10” NPS (250 DN)	Valve Only	235 lbs (107 Kg)	440 lbs (200 Kg)
	DFR220	507 lbs (230 Kg)	712 lbs (323 Kg)
12” NPS (300 DN)	Valve Only	347 lbs (157 Kg)	645 lbs (293 Kg)
	DFR220	619 lbs (281 Kg)	917 lbs (416 Kg)
16” NPS (400 DN)	Valve Only	735 lbs (333 Kg)	1125 lbs (511 Kg)
	DFRP 113	980 lbs (445 Kg)	1370 lbs (621 Kg)
20” NPS (500 DN)	Valve Only	1155 lb (524 Kg)	1661 lbs (755 Kg)
	DFRP 113	1400 lbs (635 Kg)	1906 lbs (866 Kg)
	DFRP 154	1450 lbs (769 Kg)	1956 lbs (889 Kg)
24” NPS (600 DN)	Valve Only	2122 lbs (965 Kg)	2877 lbs (1308 Kg)

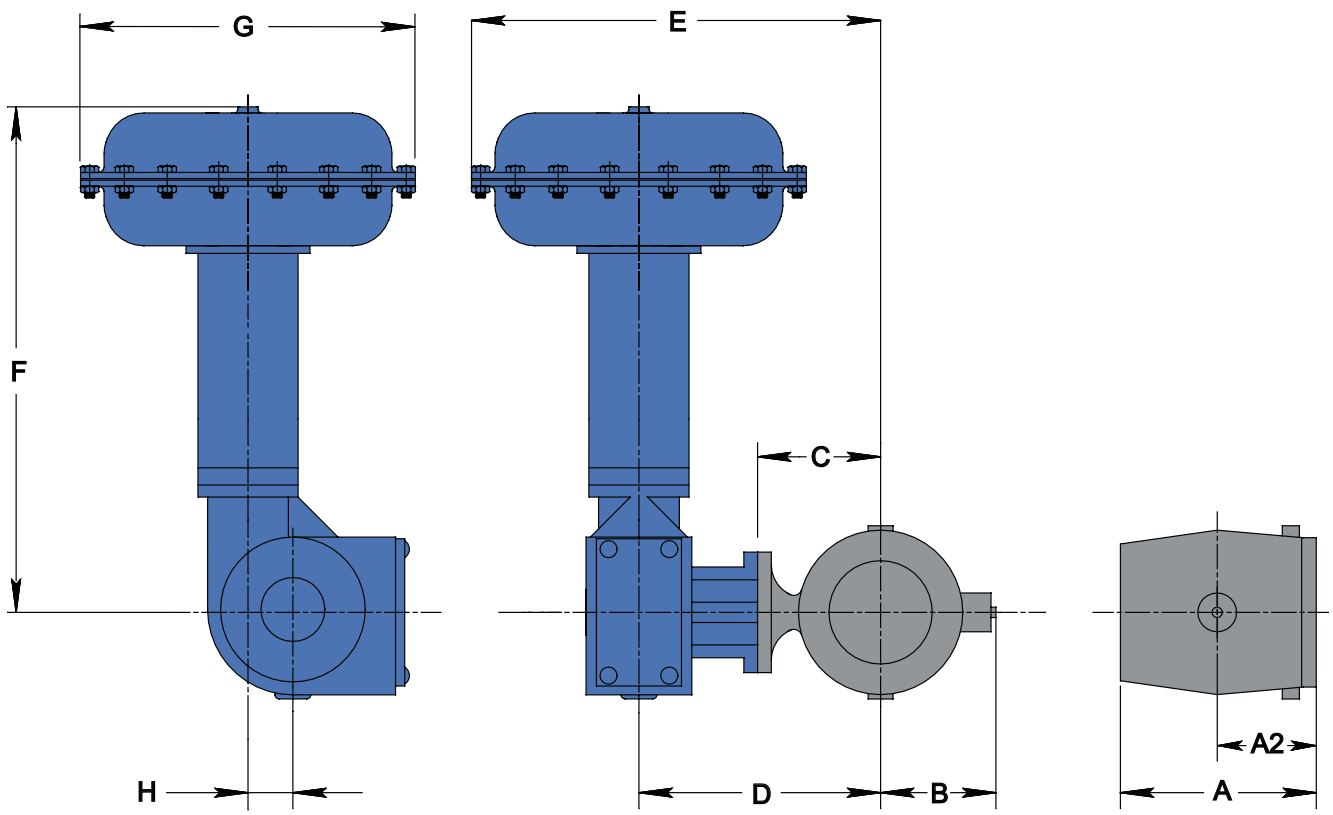

Figure 2 Typical Valve/Actuator Assembly Dimensional Diagram

Table 4

Model 570 Valve Dimensions

Valve / Actuator Size	Dimensional Reference Inch (mm)								
	A	A2	B	C	D	E	F	G	H
1" (25 DN) DFR026	4.00 (102)	2.21 (56)	3.19 (81)	3.75 (95)	9.13 (232)	14.10 (358)	10.13 (257)	9.94 (253)	0.75 (19.1)
1-1/2" (40 DN) DFR026	4.50 (114)	2.46 (62)	3.50 (89)	4.75 (121)	10.13 (257)	15.10 (384)	10.13 (257)	9.94 (253)	0.75 (19.1)
2" (50 DN) DFR026	4.88 (124)	2.63 (67)	4.19 (106)	5.00 (127)	10.38 (264)	15.35 (390)	10.13 (257)	9.94 (253)	0.75 (19.1)
3" (80 DN) DFR070	6.50 (165)	3.10 (79)	4.62 (117)	5.12 (130)	11.42 (290)	17.99 (457)	23.94 (608)	13.13 (334)	2.13 (54.1)
4" (100 DN) DFR070	7.62 (194)	3.99 (101)	5.25 (133)	5.56 (141)	11.86 (301)	18.43 (468)	23.94 (608)	13.13 (334)	2.13 (54.1)
6" (150 DN) DFR156	9.00 (229)	4.29 (109)	6.25 (159)	7.06 (179)	13.36 (339)	22.68 (576)	34.50 (876)	18.63 (473)	2.50 (63.5)
8" (200 DN) DFR156	9.56 (243)	4.88 (124)	7.69 (195)	9.12 (232)	14.92 (379)	24.24 (616)	34.50 (876)	18.63 (473)	2.50 (63.5)

ASME Class: 150 / 300 / 600 • Envelope Dimensions are + / - 0.25 in. (6.4 mm) • Face to Face Tolerance Per ANSI/ISA 75.08.02

Table 5

Model 571 and 573 Valve Dimensions

Valve Size / Actuator Size	Dimensional Reference Inch (mm)								
	A	A2	B	C	D	E	F	G	H
1" (25 DN) DFR026	4.00 (102)	2.21 (56)	3.19 (81)	3.75 (95)	9.13 (232)	14.10 (358)	10.13 (257)	9.94 (253)	0.75 (19.1)
1-1/2" (40 DN) 571 DFR026	4.50 (114)	2.46 (62)	3.38 (90)	4.75 (121)	10.13 (257)	15.10 (384)	10.13 (257)	9.94 (253)	0.75 (19.1)
1-1/2" (40 DN) 573 DFR026	4.50 (114)	2.46 (62)	3.50 (89)	4.75 (121)	10.13 (257)	15.10 (384)	10.13 (257)	9.94 (253)	0.75 (19.1)
2" (50 DN) DFR026	4.88 (124)	2.63 (67)	4.19 (106)	5.00 (127)	10.38 (264)	15.35 (390)	10.13 (257)	9.94 (253)	0.75 (19.1)
3" (80DN) DFR070	6.50 (165)	3.10 (79)	4.62 (117)	5.12 (130)	11.42 (290)	17.99 (457)	23.94 (608)	13.13 (334)	2.13 (54.1)
4" (100 DN) DFR070	7.62 (194)	3.99 (101)	5.25 (133)	5.56 (141)	11.86 (301)	18.43 (468)	23.94 (608)	13.13 (334)	2.13 (54.1)
6" (150 DN) DFR156	9.00 (229)	4.29 (109)	6.25 (159)	6.44 (164)	12.24 (311)	21.56 (548)	34.50 (876)	18.63 (473)	2.50 (63.5)
8" (200 DN) DFR156	9.56 (243)	4.88 (124)	7.69 (195)	9.12 (232)	14.92 (379)	24.24 (616)	34.50 (876)	18.63 (473)	2.50 (63.5)
10" (250 DN) DFR220	11.69 (297)	5.77 (147)	8.75 (222)	10.25 (260)	16.05 (408)	26.62 (676)	33.44 (849)	21.13 (537)	2.50 (63.5)
12" (300 DN) DFR220	13.31 (338)	6.87 (174)	10.56 (268)	11.94 (303)	17.74 (451)	28.31 (719)	33.44 (849)	21.13 (537)	2.50 (63.5)
16" (400 DN) 571 DFRP 113	16.00 (406)	9.00 (229)	13.00 (330)	14.38 (365)	23.65 (601)	30.93 (786)	29.22 (742)	15.00 (381)	4.75 (121)
16" (400 DN) 573 DFRP 113	16.00 (406)	9.00 (229)	13.31 (338)	14.38 (365)	23.65 (601)	30.93 (786)	29.22 (742)	15.00 (381)	4.75 (121)
20" (500 DN) DFRP 113	20.00 (508)	9.25 (235)	16.00 (406)	18.00 (457)	27.25 (692)	34.80 (883)	29.22 (742)	15.00 (381)	4.75 (121)
20" (500 DN) DFRP 154	20.00 (508)	9.25 (235)	16.00 (406)	18.00 (457)	27.25 (692)	35.60 (905)	29.22 (742)	16.75 (425)	4.75 (121)
24" (600 DN) Valve Only	24.00 (610)	12.75 (324)	19.70 (500)	21.55 (547)	N/A	N/A	N/A	N/A	N/A

ASME Class: 571 = 150, 573 = 300 • Envelope Dimensions are + / - 0.25 in. (6.4 mm)
• Face to Face: All sizes except for 16" are per ANSI/ISA 75.08.02. 16" sizes are per ASME B16.10 Short only.

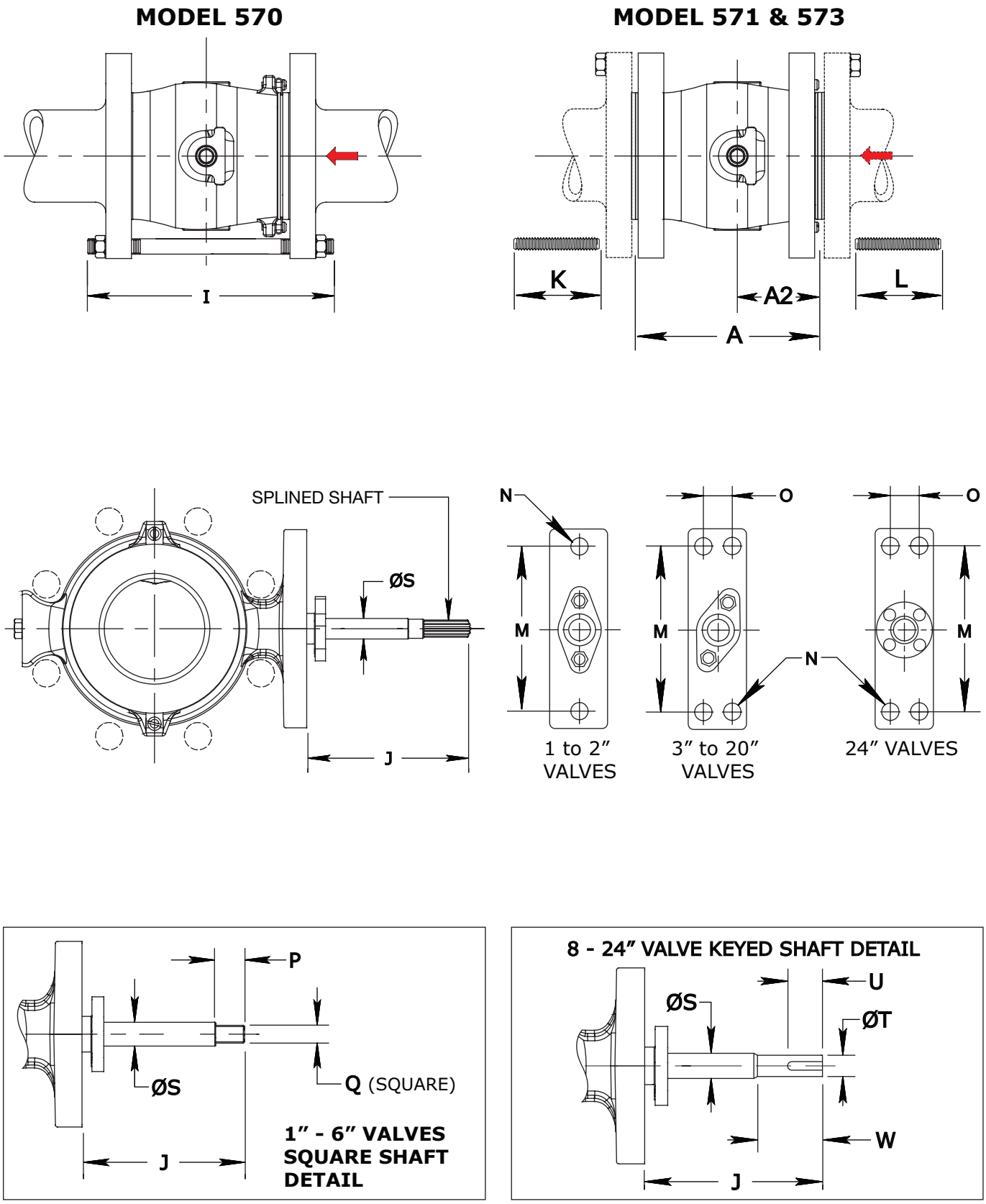

Figure 3 Typical Valve Dimensional Diagram

Table 6

Valve Shaft Diameters

Model	Valve Size	S Inch (mm)
All	1” NPS (25 DN)	1/2 (12.7)
All	1-1/2” & 2” NPS (40 & 50 DN)	5/8 x 1/2 spline (15.9 x 12.7 spline)
All	3” & 4” NPS (80 & 100 DN)	3/4 (19.1)
All	6” NPS (150 DN)	1 (25.4)
All	8” NPS (200 DN)	1-1/4 (31.8)
571 & 573	10” NPS (250 DN)	1-1/4 (31.8)
570 & 573	12” NPS (300 DN)	1-1/2 (38.1)
571	16” NPS (400 DN)	2-1/8 x 2 spline (54.0 x 50.8)
573	16” NPS (400 DN)	2-1/8 (54.0)
571 & 573	20” NPS (500 DN)	2-1/2 (63.5)
571	24” NPS (600 DN)	2-1/2 (63.5)
573	24” NPS (600 DN)	3 (76.2)

Table 7

Model 570 Line Flange Stud Lengths (Refer to Figures 3 & 4)

Valve Size	I Inch (mm)		
	Class 150	Class 300	Class 600
1” NPS (25 DN)	6.94 (176)	7.94 (202)	7.94 (202)
1-1/2” NPS (40 DN)	7.44 (189)	8.81 (224)	8.81 (224)
2” NPS (50 DN)	8.31 (211)	9.31 (237)	9.31 (237)
3” NPS (80 DN)	10.00 (254)	11.00 (279)	11.25 (286)
4” NPS (100 DN)	11.25 (286)	12.00 (305)	13.50 (343)
6” NPS (150 DN)	13.50 (343)	14.25 (362)	16.25 (413)
8” NPS (200 DN)	13.50 (343)	15.25 (387)	16.75 (426)

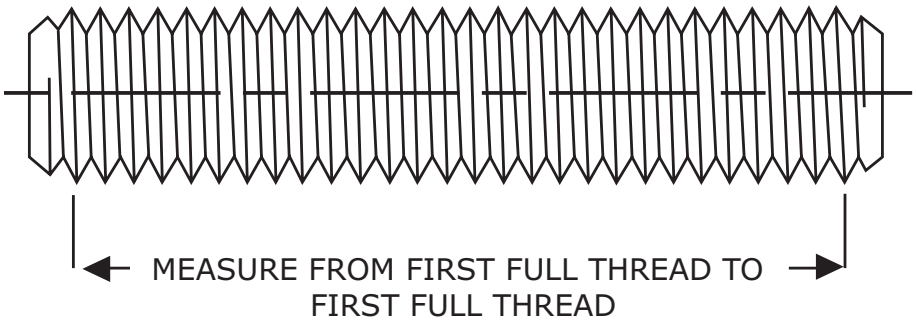

Figure 4 Flange Stud Measuring Method

Table 8

Model 571 and 573 Flange Stud Lengths (Refer to Figures 3 & 4)

Valve Size	Model 571 Inch (mm)		Model 573 Inch (mm)	
	K	L	K	L
1” NPS (25 DN)	2.88 (73)	3.12 (79)	3.69 (94)	3.94 (100)
1-1/2” NPS (40 DN)	3.12 (80)	3.62 (92)	4.25 (108)	4.50 (114)
2” NPS (50 DN)	3.44 (87)	3.94 (100)	3.94 (100)	4.19 (106)
3” NPS (80 DN)	3.94 (100)	4.19 (106)	4.75 (121)	5.25 (133)
4” NPS (100 DN)	3.94 (100)	4.69 (119)	5.00 (127)	5.50 (140)
6” NPS (150 DN)	4.50 (114)	5.00 (127)	5.50 (140)	6.00 (152)
8” NPS (200 DN)	5.00 (127)	5.25 (133)	6.00 (152)	6.50 (165)
10” NPS (250 DN)	5.25 (133)	5.75 (146)	6.81 (173)	7.31 (186)
12” NPS (300 DN)	5.25 (133)	6.00 (152)	7.31 (186)	7.81 (198)
16” NPS (400 DN)	5.25 (133)	6.00 (152)	7.50 (191)	8.25 (210)
20” NPS (500 DN)	6.25 (159)	7.00 (178)	8.00 (203)	8.81 (224)
24” NPS (600 DN)	7.50 (191)	8.00 (203)	9.75 (248)	10.25 (260)

Table 9

Splined Shaft Dimensions (Refer to Figure 3)

Valve Size	570 Inch (mm)		571 Inch (mm)		573 Inch (mm)	
	J	S	J	S	J	S
1" NPS (25 DN)	7.38 (188)	1/2 (12.7)	7.38 (188)	7.38 (188)	7.38 (188)	7.38 (188)
1-1/2" NPS (40 DN)	7.38 (188)	5/8 X 1/2 (15.9 X 12.7)	7.38 (188)	5/8 X 1/2 (15.9 X 12.7)	7.38 (188)	5/8 X 1/2 (15.9 X 12.7)
2" NPS (50 DN)	7.38 (188)	5/8 X 1/2 (15.9 X 12.7)	7.38 (188)	5/8 X 1/2 (15.9 X 12.7)	7.38 (188)	5/8 X 1/2 (15.9 X 12.7)
3" NPS (80 DN)	8.44 (214)	3/4 (19.1)	8.44 (214)	3/4 (19.1)	8.44 (214)	3/4 (19.1)
4" NPS (100 DN)	8.44 (214)	3/4 (19.1)	8.44 (214)	3/4 (19.1)	8.44 (214)	3/4 (19.1)
6" NPS (150 DN)	8.44 (214)	1 (25.4)	8.44 (214)	1 (25.4)	8.44 (214)	1 (25.4)
8" NPS (200 DN)	8.19 (208)	1-1/4 (31.8)	8.19 (208)	1-1/4 (31.8)	8.19 (208)	1-1/4 (31.8)
10" NPS (250 DN)	N/A	N/A	8.19 (208)	1-1/4 (31.8)	8.19 (208)	1-1/4 (31.8)
12" NPS (300 DN)	N/A	N/A	8.19 (208)	1-1/2 (38.1)	8.19 (208)	1-1/2 (38.1)
16" NPS (400 DN)	N/A	N/A	14.00 (356)	2-1/8 x 2 (54.0 x 50.8)	14.00 (356)	2-1/8 (54.0)
20" NPS (500 DN)	N/A	N/A	14.00 (356)	2-1/2 (63.5)	14.00 (356)	2-1/2 (63.5)
24" NPS (600 DN)	N/A	N/A	18.50 (470)	2-1/2 (63.5)	18.50 (470)	3 (76.2)

Table 10

Square Shaft Dimensions (Refer to Figure 3)

Valve Size	Dimensional Reference Inch (mm)			
	J	S	P	Q
1" NPS (25 DN)	3.24 (82.3)	1/2 (12.7)	0.75 (19.1)	0.431 (11.0)
1-1/2" NPS (40 DN)	3.24 (82.3)	5/8 (15.9)	0.75 (19.1)	0.431 (11.0)
2" NPS (50 DN)	3.24 (82.3)	5/8 (15.9)	0.75 (19.1)	0.431 (11.0)
3" NPS (80 DN)	3.82 (97.0)	3/4 (19.1)	0.75 (19.1)	0.550 (14.0)
4" NPS (100 DN)	3.82 (97.0)	3/4 (19.1)	0.75 (19.1)	0.550 (14.0)
6" NPS (150 DN)	5.07 (128.8)	1 (25.4)	1.00 (25.4)	0.747 (19.0)

Table 11

Keyed Shaft Dimensions (Refer to Figure 3)

Valve Size	570 Inch (mm)					571 & 573 Inch (mm)				
	J	S	U	T	W	J	S	U	T	W
8" NPS (200 DN)	7.62 (194)	1-1/4 (31.8)	3.50 (88.9)	1-1/8 (28.6)	3.75 (95.3)	7.62 (194)	1-1/4 (31.8)	3.50 (88.9)	1-1/8 (28.6)	3.75 (95.3)
	8" Valve Shafts use a 1/4" (6.35mm) x 3.25" (82.6mm) Key Stock.					8" Valve Shafts use a 1/4" (6.35mm) x 3.25" (82.6mm) Key Stock.				
10" NPS (250 DN)	N/A					7.60 (193)	1-1/4 (31.8)	3.50 (88.9)	1-1/8 (28.6)	3.75 (95.3)
						10" Valve Shafts use a 1/4" (6.35mm) x 3.25" (82.6mm) Key Stock.				
12" NPS (300 DN)	N/A					5.75 (146)	1-1/2 (38.1)	2.95 (74.9)	1-3/8 (34.9)	3.13 (79.5)
						12" Valve Shafts use a 5/16" (7.94mm) x 2.63" (66.8mm) Key Stock.				
16" NPS (400 DN)	N/A					7.50 (191)	2-1/8 (54.0)	3.60 (91.4)	2.00 (50.8)	4.00 (101.6)
						16" Valve Shafts use a 1/2" (12.7mm) x 3.25" (82.6mm) Key Stock.				
20" NPS (500 DN)	N/A					11.69 (297)	2-1/2 (63.5)	3.75 (95.3)	2.25 (57.2)	3.75 (95.3)
						20" Valve Shafts use a 1/2" (12.7mm) x 3.40" (86.4mm) Key Stock.				
24" NPS (600 DN)	N/A					15.51 (394)	3.00 (76.2)	4.50 (114)	2.75 (70)	4.50 (114)
						24" Valve Shafts use a 5/8" (15.88mm) x 4.19" (106mm) Key Stock.				

Table 12

Flange Stud Diameters and Threads Per Inch (TPI)

Valve Size	TPI		
	Class 150	Class 300	Class 600
1" NPS (25 DN)	Consult Dyna-Flo	Consult Dyna-Flo	Consult Dyna-Flo
1-1/2" NPS (40 DN)	Consult Dyna-Flo	Consult Dyna-Flo	Consult Dyna-Flo
2" NPS (50 DN)	5/8" - 11	5/8" - 11	5/8" - 11
3" NPS (80 DN)	5/8" - 11	3/4" - 10	3/4" - 10
4" NPS (100 DN)	5/8" - 11	3/4" - 10	7/8" - 9
6" NPS (150 DN)	3/4" - 10	3/4" - 10	1" - 8
8" NPS (200 DN)	3/4" - 10	7/8" - 9	1-1/8" - 7
10" NPS (250 DN)	7/8" - 9	1" - 8	N/A
12" NPS (300 DN)	7/8" - 9	1-1/8" - 7	N/A
16" NPS (400 DN)	1" - 8	1-1/4" - 7	N/A
20" NPS (500 DN)	Consult Dyna-Flo	Consult Dyna-Flo	Consult Dyna-Flo
24" NPS (600 DN)	Consult Dyna-Flo	Consult Dyna-Flo	Consult Dyna-Flo

Table 13

Flange Stud Quantity

Valve Size	Number of Studs Required (Double for Models 571 & 573)		
	Class 150	Class 300	Class 600
1” NPS (25 DN)	4	Consult Dyna-Flo	Consult Dyna-Flo
1-1/2” NPs (40 DN)	4	Consult Dyna-Flo	Consult Dyna-Flo
2” NPS (50 DN)	4	8	8
3” NPS (80 DN)	4	8	8
4” NPS (100 DN)	8	8	8
6” NPS (150 DN)	8	12	12
8” NPS (200 DN)	8	12	12
10” NPS (250 DN) (571 & 573 ONLY)	12	16	N/A
12” NPS (300 DN) (571 & 573 ONLY)	12	12	N/A
16” NPS (400 DN) (571 & 573 ONLY)	16	20	N/A
20” NPS (500 DN) (571 & 573 ONLY)	24	24	N/A
24” NPS (600 DN) (571 & 573 ONLY)	24	24	N/A

Table 14

Model 570 Valve Mounting Pad Dimensions (Refer to Figure 3)

Valve Size	Dimensional Reference Inch (mm)		
	N	M	O
1” / 1-1/2” / 2” NPS (25 / 40 / 50 DN)	0.56 (14.2)	4.62 (117)	—
3” / 4” / 6” NPS (80 / 100 / 150 DN)	0.56 (14.2)	6.00 (152)	1.25 (31.8)
8” NPS (200 DN)	0.69 (17.5)	9.25 (235)	1.81 (46.0)

Table 15

Model 571 & 573 Valve Mounting Pad Dimensions (Refer to Figure 3)

Valve Size	Dimensional Reference Inch (mm)		
	N	M	O
1” / 1-1/2” / 2” NPS (25 / 40 / 50 DN)	0.56 (14.2)	4.62 (117)	—
3” / 4” / 6” NPS (80 / 100 / 150 DN)	0.56 (14.2)	6.00 (152)	1.25 (31.8)
8” / 10” / 12” NPS (200 / 250 / 300 DN)	0.69 (17.5)	9.25 (235)	1.81 (46.0)
16” NPS (400 DN)	0.75 (19.1)	10.75 (273)	2.00 (50.8)
20” NPS (500 DN)	0.88 (22.4)	13.25 (337)	3.00 (76.2)
24” NPS (600 DN)	1.25 (31.8)	21.00 (533)	5.00 (127)

Table 16

Construction Materials

Part Description	Material
Actuator Mounting Bolt / Actuator Mounting Nut	Plated Steel (2 required for 1 - 2” valves) (4 required for 3 - 12” valves)
Back Up Ring (1, 1-1/2, 2” Valves Only)	Dual Grade S31600/S31603 (316/316L)
Ball	Alloy 6 (for 1 - 2” valves)
	CG8M Chrome Plated
	CG8M/Alloy 6 Leading Edge/Chrome Plated
Ball Seal	Composition Ultra
	Alloy 6
	S21800
Bearing (2 required)	PEEK/Carbon-filled PTFE (Refer to Tables 18 & 19)
	S44004 HT
	Alloy 6
Body / Seal Protector Ring / Flow Ring	LCC
	WCC
	CG8M
Follower Shaft / Shaft / Shaft Pin / Shaft Key	S20910
Follower Shaft Pin	Dual Grade S31600/S31603 (316/316L)
Gasket	Graphoil GR. GTB
Live Loaded Packing Follower	PTFE/CF8M
Packing Box Ring	S31600**
Packing Flange / Packing Follower	CF8M
Packing Nut (2 required)	Dual Grade S31600/S31603 (316/316L)
Packing Set	PTFE
	Graphite
Packing Stud (2 required)	B8M
Flange / Pipe Plug	A105 Steel
	A350 Grade LF2
	Dual Grade S31600/S31603 (316/316L)
Flange Nut	2HM / 8M
Flange Stud	B7M / B8M
Radial Seal	Carbon-filled PTFE/R30003
Seal Protector Clip (2 required)	Stainless Steel
Seal Protector Screw	18-8
Seal Protector Washer (2 required)	Stainless Steel
Shaft Pins (for 16” to 24” valves)	Alloy 6
Spiral Wound Gasket (for 16” to 24” valves)	S31600/Graphite
Spring Washers	N07718
Wave Spring	N07750

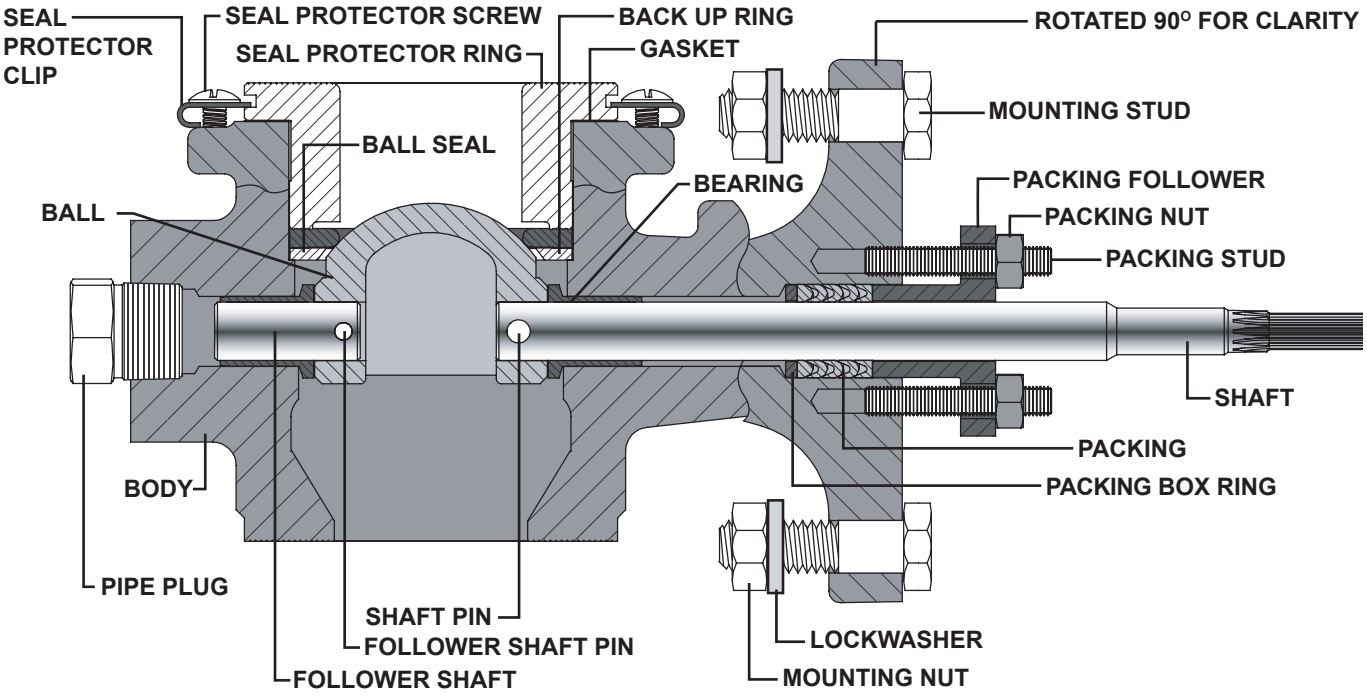

Figure 5 1", 1-1/2" & 2" NPS (25, 40 & 50 DN) Model 570 Cross Section

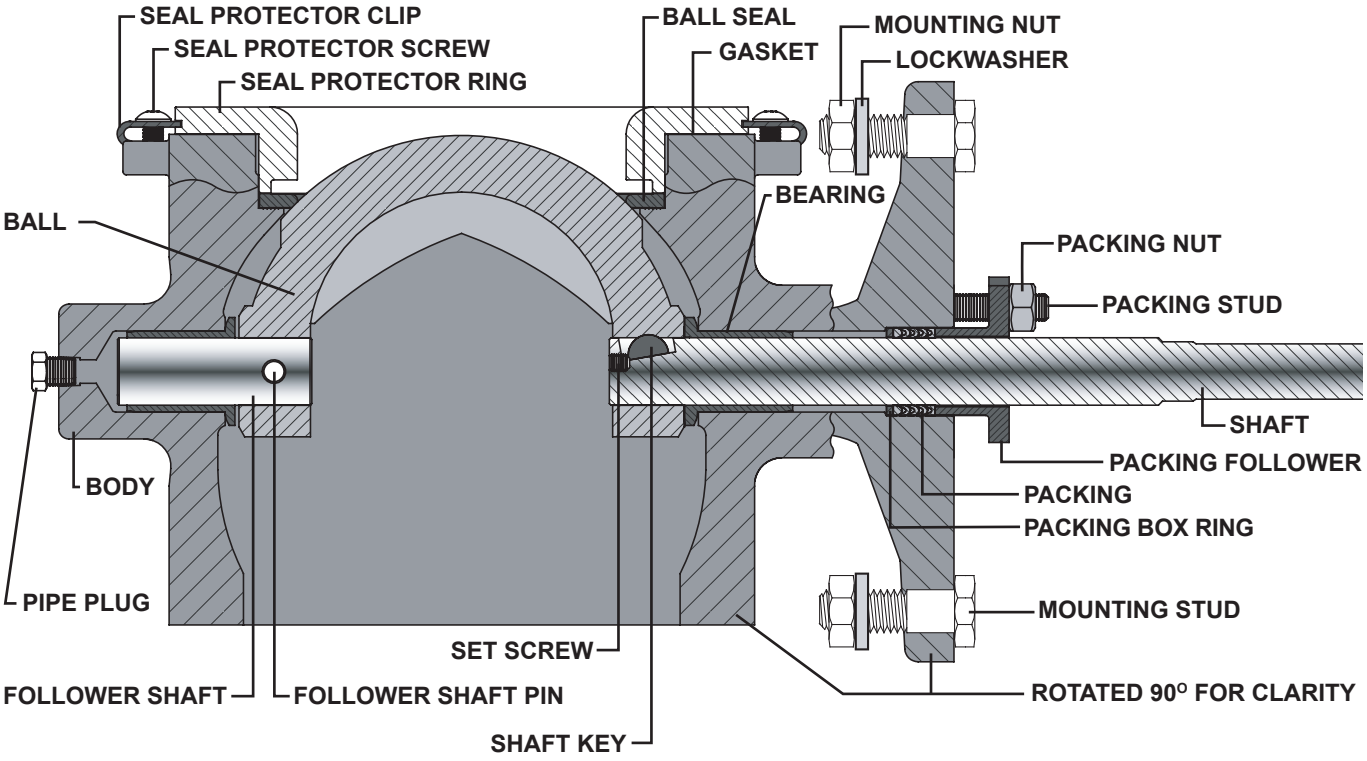

Figure 6 3" to 8" NPS (80 to 200 DN) Model 570 Cross Section

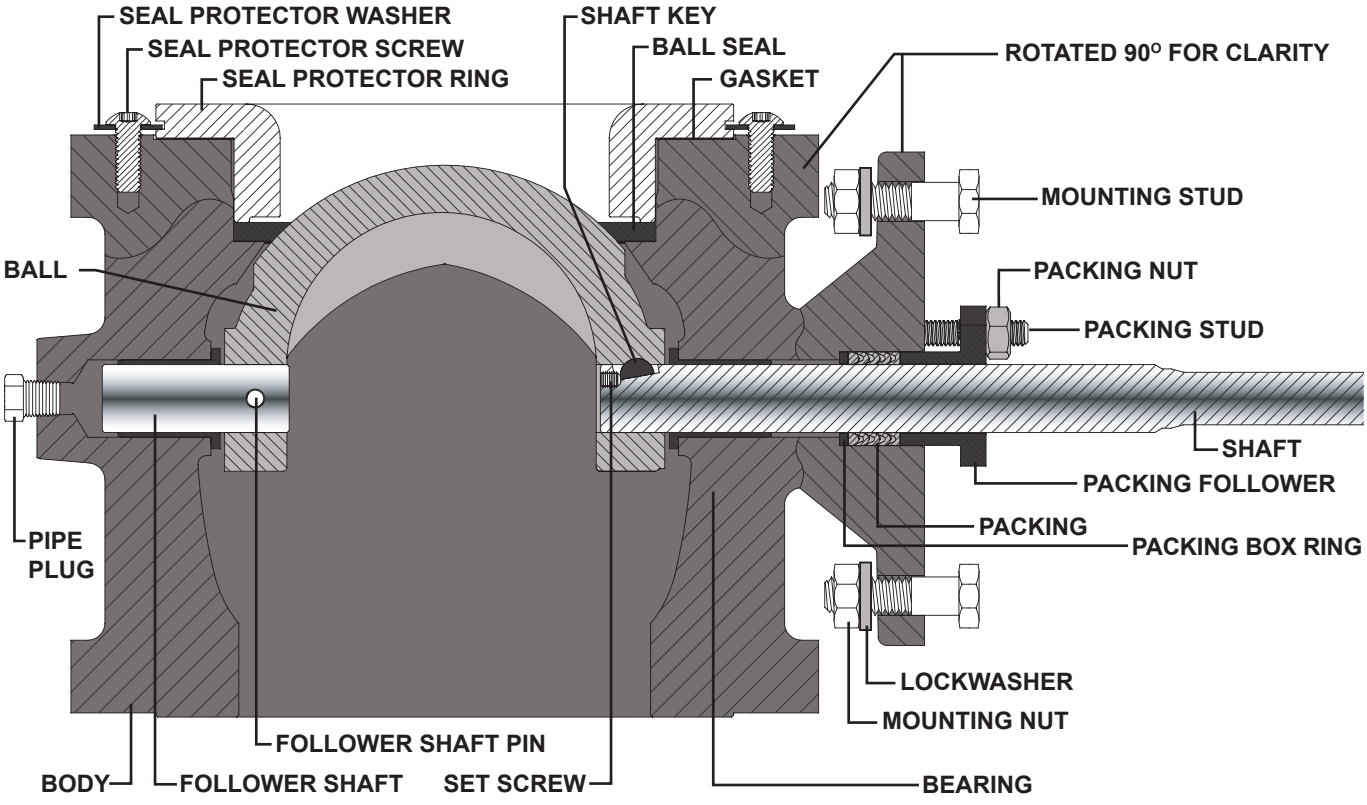

Figure 7 3" to 12" NPS (80 to 300 DN) Models 571 & 573 Cross Section

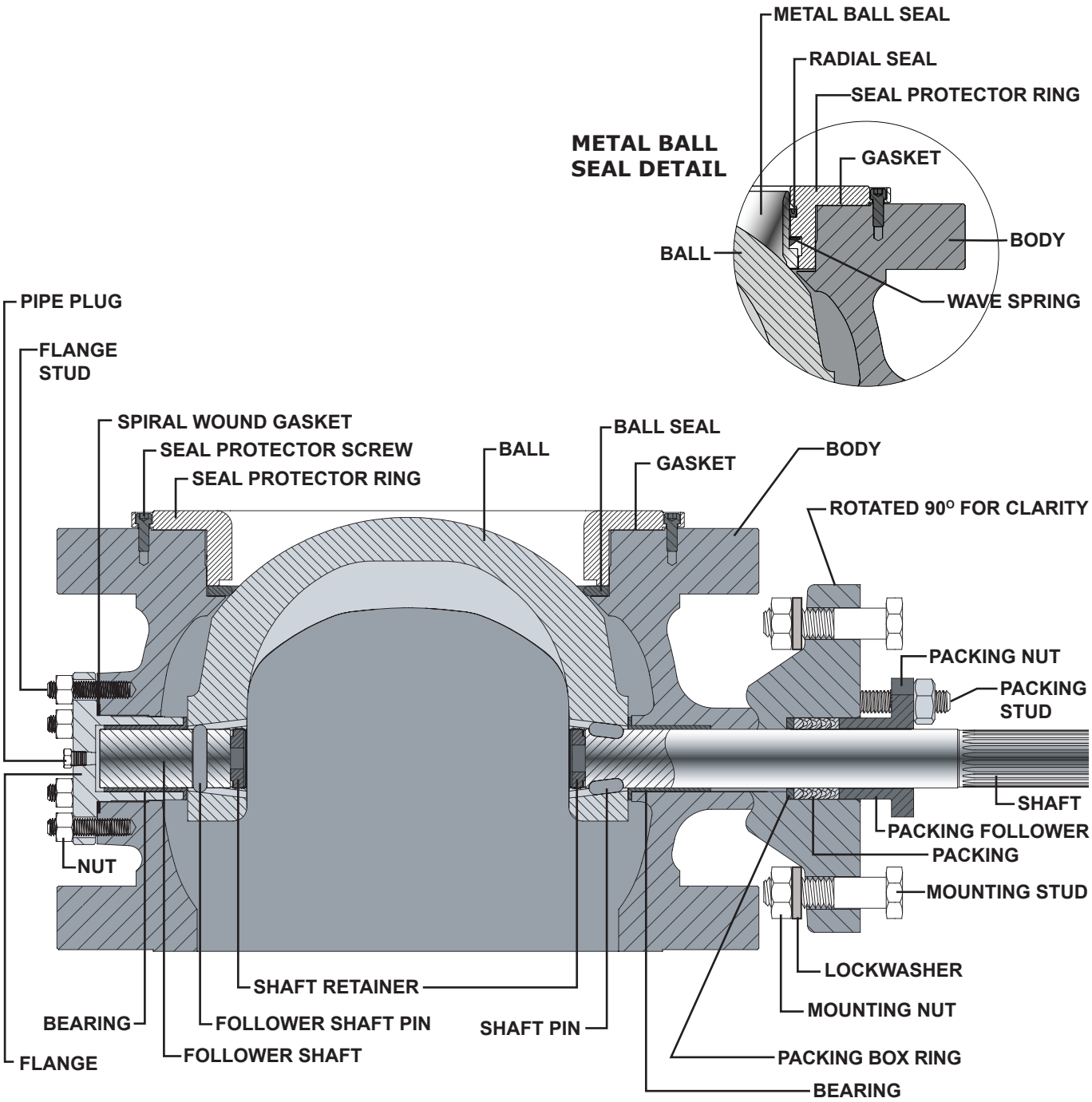

Figure 8 16” to 24” NPS (400 to 600 DN) Models 571 & 573 Cross Section

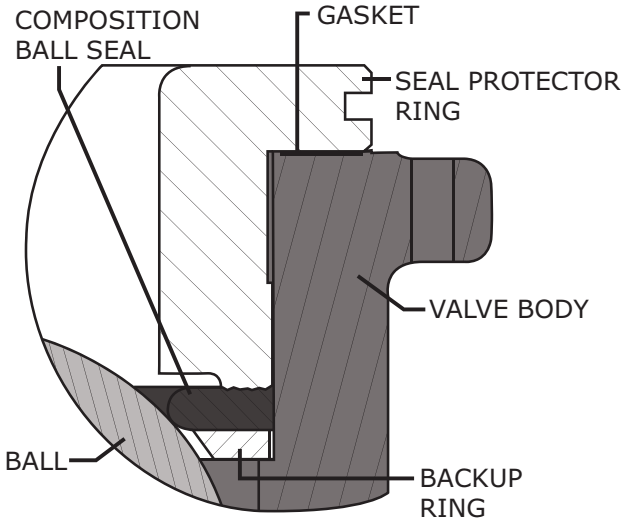

1 TO 2 INCH COMPOSITION BALL SEAL & BACKUP RING

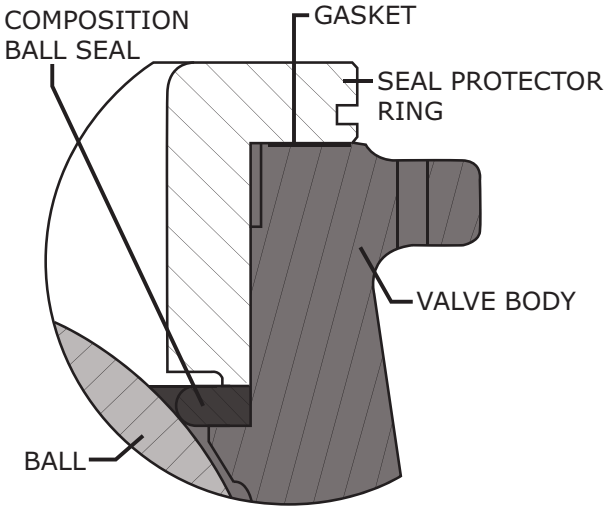

SIZE 3 THROUGH 12 INCH COMPOSITION BALL SEAL

Figure 9 Ball Seal Assembly Diagrams - Composition Ball Seal 1 to 12 Inch Valves (Continued in Figure 10)

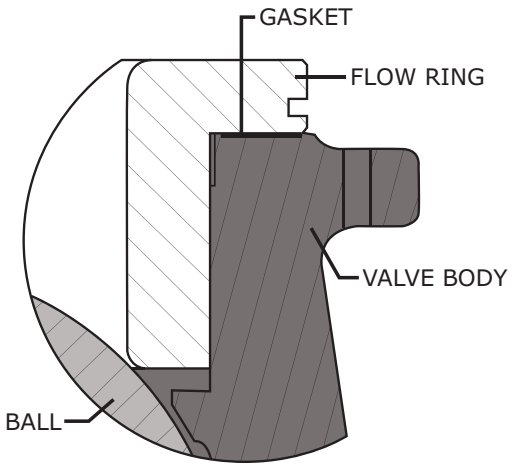

FLOW RING SEAT DETAIL

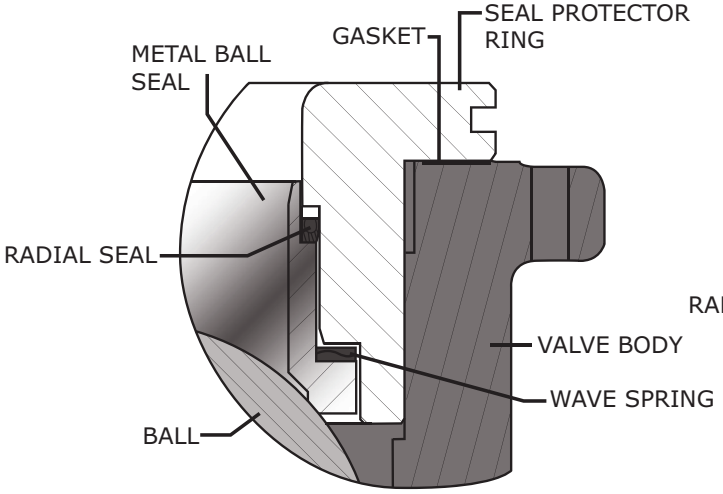

1 - 2 INCH METAL BALL SEAL

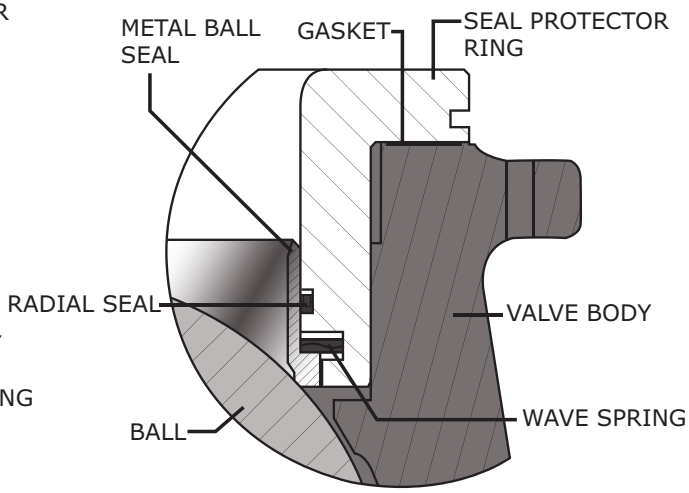

SIZE 3 THROUGH 12 INCH METAL BALL SEAL

Figure 10 Ball Seal Assembly Diagrams Continued

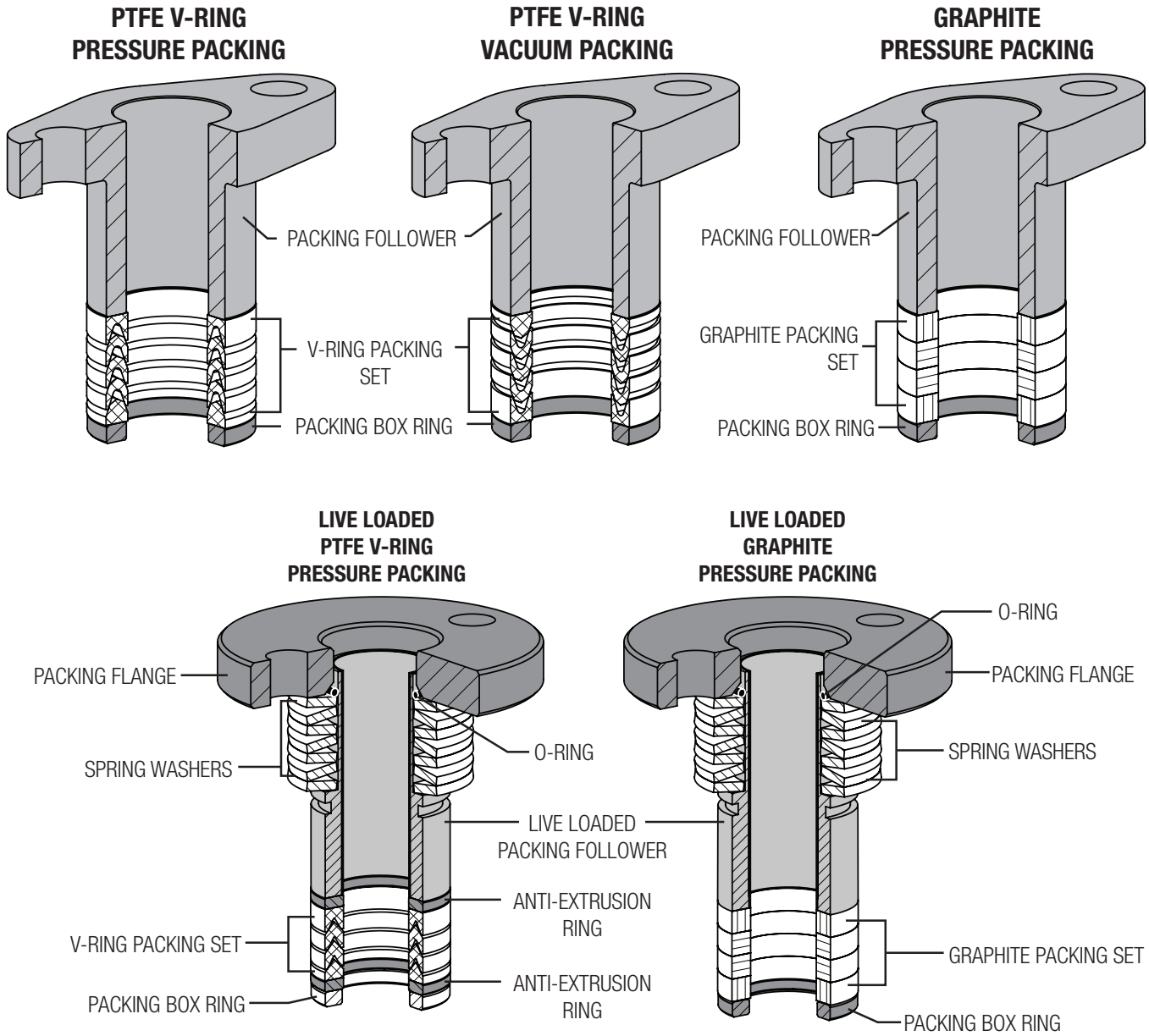

NOTE: Packing arrangements may differ from those shown above depending on valve size and application. Refer to the Model 570, 571, 573 Instruction Manual (P-570M) for more information on packing arrangements.

Figure 11 Valve Packing Configurations

Table 17

Body Pressure Temperature Ratings

Temperature Range	ASME Pressure Class								
	WCC Class 150	LCC[1] Class 150	CG8M Class 150	WCC Class 300	LCC[1] Class 300	CG8M Class 300	WCC Class 600	LCC[1] Class 600	CG8M Class 600
	kPa								
-46 to -29°C	—	1,999	1,896	—	5,171	4,964	—	10,342	9,928
-29 to 38°C	1,999	1,999	1,896	5,171	5,171	4,964	10,342	10,342	9,928
93°C	1,793	1,793	1,620	5,171	5,171	4,275	10,342	10,342	8,549
149°C	1,586	1,586	1,482	5,033	5,033	3,861	10,032	10,032	7,722
204°C	1,376	1,379	1,344	4,861	4,861	3,550	9,722	9,722	7,067
260°C	1,172	1,172	1,172	4,585	4,585	3,309	9,170	9,170	6,584
316°C	965	965	965	4,171	4,171	3,102	8,343	8,343	6,205
343°C	862	862	862	4,068	4,068	3,033	8,101	8,101	6,102
371°C	758	—	758	3,827	—	2,999	7,826	—	5,998
399°C	655	—	655	3,842	—	2,930	6,964	—	5,895
427°C	552	—	552	3,482	—	2,895	5,688	—	5,826
Temperature Range	**Psi**								
-50 to -20°F	—	290	275	—	750	720	—	1,500	1,440
-20 to 100°F	290	290	275	750	750	720	1,500	1,500	1,440
200°F	260	260	235	750	750	620	1,500	1,500	1,240
300°F	230	230	215	730	730	560	1,455	1,455	1,120
400°F	200	200	195	705	705	515	1,405	1,405	1,025
500°F	170	170	170	665	665	480	1,330	1,330	955
600°F	140	140	140	605	605	450	1,210	1,210	900
650°F	125	125	125	590	590	440	1,175	1,175	885
700°F	110	—	110	555	—	435	1,110	—	870
750°F	95	—	95	505	—	425	1,015	—	855
800°F	80	—	80	410	—	420	825	—	845

Pressure Temperature Ratings as per ASME B16.34.

NOTES:
(1) - Do not use over 650 °F (343 °C)

Table 18

Maximum Allowable Shutoff Pressure Drops for Bearing and Ball Seal Material

Bearing Material	Ball Seal Material	Temperature Range °F (°C)	Valve Size						
			1" NPS (25 DN)	1-1/2" NPS (40 DN)	2" NPS (50 DN)	3" NPS (80 DN)	4" NPS (100 DN)	6" NPS (150 DN)	8" NPS (200 DN)
			Psi (kPa)						
PEEK / Carbon-filled PTFE (Standard)	Composition Ultra	-50 to 100 (-46 to 38)	750 (5,171)	750 (5,171)	750 (5,171)	750 (5,171)	750 (5,171)	750 (5,171)	750 (5,171)
		200 (93)	550 (3,792)	550 (3,792)	550 (3,792)	550 (3,792)	550 (3,792)	550 (3,792)	550 (3,792)
		300 (149)	350 (2,413)	350 (2,413)	350 (2,413)	350 (2,413)	350 (2,413)	350 (2,413)	350 (2,413)
		400 (204)	150 (1,034)	150 (1,034)	150 (1,034)	150 (1,034)	150 (1,034)	150 (1,034)	150 (1,034)
		450 (232)	50 (345)	50 (345)	50 (345)	50 (345)	50 (345)	50 (345)	50 (345)
	Metal	-50 to 500 (-46 to 260)	750 (5,171)	750 (5,171)	750 (5,171)	750 (5,171)	750 (5,171)	750 (5,171)	750 (5,171)
	Flow Ring	-50 to 500 (-46 to 260)	1,500 (10,342)	1,500 (10,342)	1,500 (10,342)	1,500 (10,342)	1,050 (7,240)	1,090 (7,515)	1,070 (7,377)
S44004	Metal	-50 to 550 (-46 to 288)	-	-	371 (2,558)	252 (1,737)	160 (1,103)	157 (1,082)	162 (1,117)
	Flow Ring	-50 to 800 (-46 to 427)	-	-	386 (2,661)	272 (1,875)	157 (1,082)	162 (1,117)	160 (1,103)
Alloy 6	Metal	-50 to 550 (-46 to 288)	750 (5,171)	725 (4,999)	371 (2,558)	252 (1,737)	160 (1,103)	157 (1,082)	162 (1,117)
	Flow Ring	-50 to 800 (-46 to 427)	1,080 (7,446)	720 (4,964)	386 (2,661)	272 (1,875)	157 (1,082)	162 (1,117)	160 (1,103)
S17400 / Carbon-filled PTFE (Obsolete)	Composition Ultra	-50 to 100 (-46 to 38)	-	-	-	-	-	750 (5,171)	750 (5,171)
		200 (93)	-	-	-	-	-	550 (3,792)	550 (3,792)
		300 (149)	-	-	-	-	-	350 (2,413)	350 (2,413)
		400 (204)	-	-	-	-	-	150 (1,034)	150 (1,034)
		450 (232)	-	-	-	-	-	50 (345)	50 (345)
	Metal	-50 to 500 (-46 to 260)	-	-	-	-	-	750 (5,171)	750 (5,171)
	Flow Ring	-50 to 500 (-46 to 260)	-	-	-	-	-	1,090 (7,515)	1,070 (7,377)

NOTE: Do not exceed the pressure/temperature rating of the valve body material as per Table 17.

Table 19

Maximum Allowable Shutoff Pressure Drops for Bearing and Ball Seal Material

Bearing Material	Ball Seal Material	Temperature Range °F (°C)	Valve Size					
			10" NPS (250 DN)	12" NPS (300 DN)	16" NPS (400 DN)		20" NPS (500 DN)	24" NPS (600 DN)
			Psi (kPa)					
					2-1/8 x 2" (54.0 x 50.8mm) Shaft	2-1/8" (54.0mm) Shaft		
PEEK / Carbon-filled PTFE (Standard)	Composition Ultra	-50 to 100 (-46 to 38)	583 (4,020)	545 (3,758)	345 (2,379)	450 (3,103)	450 (3,103)	450 (3,103)
		200 (93)	550 (3,792)	545 (3,758)	345 (2,379)	450 (3,103)	450 (3,103)	450 (3,103)
		300 (149)	350 (2,413)	350 (2,413)	345 (2,379)	350 (2,413)	350 (2,413)	350 (2,413)
		400 (204)	150 (1,034)	150 (1,034)	150 (1,034)	150 (1,034)	150 (1,034)	150 (1,034)
		450 (232)	50 (345)	50 (345)	50 (345)	50 (345)	50 (345)	50 (345)
	Metal	-50 to 500 (-46 to 260)	593 (4,089)	553 (3,813)	384 (2,648)	450 (3,103)	450 (3,103)	450 (3,103)
	Flow Ring	-50 to 500 (-46 to 260)	587 (4,047)	547 (3,771)	508 (3,503)	708 (4,881)	648 (4,468)	656 (4,523)
S44004	Metal	-50 to 550 (-46 to 288)	297 (2,048)	277 (1,910)	363 (2,503)	363 (2,503)	203 (1,400)	328 (2,261)
	Flow Ring	-50 to 800 (-46 to 427)	293 (2,020)	273 (1,882)	353 (2,434)	353 (2,434)	323 (2,227)	328 (2,261)
Alloy 6	Metal	-50 to 550 (-46 to 288)	89 (614)	83 (572)	109 (752)	109 (752)	99 (683)	98 (676)
	Flow Ring	-50 to 800 (-46 to 427)	88 (607)	82 (565)	106 (731)	106 (731)	97 (669)	98 (676)
S17400 / Carbon-filled PTFE (Obsolete)	Composition Ultra	-50 to 100 (-46 to 38)	583 (4,020)	545 (3,758)	-	-	-	-
		200 (93)	550 (3,792)	545 (3,758)	-	-	-	-
		300 (149)	350 (2,413)	350 (2,413)	-	-	-	-
		400 (204)	150 (1,034)	150 (1,034)	-	-	-	-
		450 (232)	50 (345)	50 (345)	-	-	-	-
	Metal	-50 to 500 (-46 to 260)	593 (4,089)	553 (3,813)	-	-	-	-
	Flow Ring	-50 to 500 (-46 to 260)	587 (4,047)	547 (3,771)	-	-	-	-

NOTE: Do not exceed the pressure/temperature rating of the valve body material as per Table 16.

Table 20

Valve Sizing Coefficients - Forward Flow, Composition And Metal Seals 1:1 Pipe To Valve Size Ratio

Valve Size		Degrees Open								
		10	20	30	40	50	60	70	80	90
1" NPS (25 DN)	C_V	0	0.300	2.10	5.10	9.10	14.0	20.0	26.5	30.5
	X_T	0.870	0.870	0.697	0.620	0.510	0.526	0.451	0.388	0.395
	F_L	0.96	0.96	0.92	0.89	0.86	0.86	0.86	0.86	0.85
1-1/2" NPS (40 DN)	C_V	0.0140	2.00	6.10	12.2	19.2	27.8	38.8	59.2	74.5
	X_T	0.510	0.460	0.548	0.557	0.520	0.516	0.481	0.344	0.310
	F_L	0.87	0.89	0.87	0.87	0.83	0.82	0.81	0.71	0.73
2" NPS (50 DN)	C_V	0.054	3.05	9.20	18.1	30.1	42.4	61.0	84.4	112
	X_T	0.648	0.788	0.775	0.688	0.610	0.590	0.487	0.418	0.379
	F_L	0.94	0.90	0.91	0.86	0.85	0.84	0.79	0.76	0.76
3" NPS (80 DN)	C_V	1.08	10.5	24.8	41.2	69.4	112	163	230	303
	X_T	0.689	0.608	0.640	0.636	0.588	0.558	0.461	0.399	0.315
	F_L	0.91	0.89	0.89	0.86	0.84	0.82	0.78	0.78	0.75
4" NPS (100 DN)	C_V	3.90	21.4	47.2	77.8	117	172	248	375	519
	X_T	0.737	0.854	0.813	0.724	0.657	0.559	0.504	0.355	0.230
	F_L	0.88	0.91	0.91	0.87	0.84	0.81	0.78	0.70	0.63
6" NPS (150 DN)	C_V	6.40	31.1	77.9	141	216	310	435	685	1,012
	X_T	0.608	0.775	0.797	0.740	0.635	0.540	0.514	0.362	0.230
	F_L	0.94	0.93	0.92	0.89	0.85	0.80	0.79	0.72	0.62
8" NPS (200 DN)	C_V	7.50	53.5	112	203	323	465	631	915	1,670
	X_T	0.580	0.790	0.741	0.642	0.611	0.543	0.569	0.370	0.210
	F_L	0.94	0.94	0.92	0.90	0.85	0.80	0.79	0.72	0.62
10" NPS (250 DN)	C_V	41.0	99.4	240	447	689	980	1,320	1,940	2,860
	X_T	0.413	0.652	0.620	0.459	0.510	0.480	0.452	0.310	0.242
	F_L	0.84	0.87	0.88	0.85	0.85	0.82	0.75	0.64	0.53
12" NPS (300 DN)	C_V	40.0	152	350	640	1,030	1,460	1,980	2,840	3,710
	X_T	0.450	0.770	0.687	0.602	0.530	0.527	0.451	0.358	0.245
	F_L	0.78	0.81	0.84	0.82	0.82	0.79	0.72	0.67	0.63
16" NPS (400 DN)	C_V	70.0	319	692	1,150	1,630	2,380	3,290	4,680	8,270
	X_T	0.273	0.731	0.566	0.469	0.469	0.452	0.384	0.265	0.133
	F_L	0.89	0.96	0.79	0.78	0.79	0.80	0.74	0.54	0.37
20" NPS (500 DN)	C_V	110	459	993	1,600	2,260	3,070	4,200	6,260	10,300
	X_T	0.999	0.907	0.605	0.526	0.563	0.593	0.526	0.345	0.198
	F_L	0.89	0.96	0.79	0.78	0.79	0.80	0.74	0.54	0.37
24" NPS (600 DN)	C_V	Consult Dyna-Flo								15,400
	X_T	Consult Dyna-Flo								
	F_L	Consult Dyna-Flo								

Relationships Of Note: $C_1=39.76\sqrt{X_T}$ $C_g=C_VC_1$ $K_m=F_L^2$

570 SERIES NUMBERING SYSTEM

SAMPLE PART NUMBER: 570-2-CLC-PNT

								MODEL
570	570	**571**	571	**573**	573			**570**
								VALVE SIZE
1	1 INCH	**5**	1-1/2 INCH	**2**	2 INCH	**3**	3 INCH	**2**
4	4 INCH	**6**	6 INCH	**8**	8 INCH	**10**	10 INCH	
12	12 INCH	**16**	16 INCH	**20**	20 INCH	**24**	24 INCH	
								BALL MATERIAL
-	CG8M / CRPL (STANDARD)			**S**	CG8M / Alloy 6 LEADING EDGE / CRPL			**-**
								ASME RATING (SEE PAGE 2)
A	150	**B**	300 / 600	**C**	150 / 300 / 600	**E**	300	**C**
								BODY MATERIAL
L	LCC	**W**	WCC	**C**	CG8M			**L**
								BALL SEAL MATERIAL
A	ALLOY 6	**H**	S21800	**C**	COMPOSITION ULTRA	**S**	FLOW RING	**C**
								PAINT
-	DFPS-01 (STANDARD)			**2**	DFPS-02 (SEVERE SERVICE)			**-**
3	DFPS-03 (HIGH TEMPERATURE)							
								PACKING STYLE
P	SINGLE PTFE V-RING			**L**	LIVE LOADED PTFE			**P**
V	SINGLE PTFE V-RING (VACUUM)			**T**	LIVE LOADED GRAPHITE			
G	SINGLE GRAPHITE							
								SHAFT STYLE
N	SPLINED			**K**	KEYED (VALVE SIZES 8” - 24” ONLY)			**N**
P	SQUARE END (VALVE SIZES 1” - 6” ONLY.							
								BEARINGS
T	PEEK / CARBON-FILLED PTFE			**A**	ALLOY 6			**T**
F	S44004							

57 _____ - ___ - ___ ___ ___ ___ ___ ___ ___

Curtiss-Wright Flow Control Company Canada, doing business as Dyna-Flo Control Valve Services

Headquarters: 1911 66 Avenue, Edmonton, AB, T6P 1M5 Canada • Telephone: 1-866-396-2356 • www.cw-dynaflo.com

Offices Worldwide: For a listing of our global sales network, visit our website at www.cw-dynaflo.com/en-gb/distribution

While this information is presented in good faith and believed to be accurate, Curtiss-Wright Flow Control Company Canada, doing business as Dyna-Flo Control Valve Services, does not guarantee satisfactory results from reliance on such information. Nothing contained herein is to be construed as a warranty or guarantee, expressed or implied, regarding the performance, merchantability, fitness or any other matter with respect to the products, nor as a recommendation to use any product or process in conflict with any patent. Curtiss-Wright Flow Control Company Canada, doing business as Dyna-Flo Control Valve Services, reserves the right, without notice, to alter or improve the designs or specifications of the products described herein.

© 2025 Curtiss-Wright. All rights reserved. Specifications are subject to change without notice. All trademarks are property of their respective owners.

Catalog # Model 570 Series Control Valve Technical Sales Bulletin

P-570B0425B | April 2025